nad KLIMA

MADE IN CANADA

DRS

Swirl diffuser

catalog 1.1.1

Thibault-GM Sport Complex, Sherbrooke, Canada

Table of contents

Presentation 1
Configuration 2
Composition, mode of operation 3
Areas of application and quick selection 4
Performance diagrams 5
Dimensions 7
Fireproof Damper 8
Correction factor of air flow when reading the balometer 9
Specifications 10
Codification 11

© NAD Klima 2019 - All rights reserved
DRS® and NAD Klima® are registred trademarks, operated under licenses by Equipement NAD inc.

The information contained in this catologue is subject to change.
Refer to the digital version on **www. nadklima.com**

Version 2019

Université du Québec, Rimouski, Canada

Presentation and benefits

The DRS is a high induction helical air jet diffuser
with a round or square steel frontal plate.
It is equipped with bent blades, which guide the air flow.

The DRS can be installed in areas where maximum comfort is desired,
in commercial and industrial situations.
The diffuser can be installed in either gypsum or suspended ceilings.

Areas of application

- Offices
- Meeting rooms
- Department stores
- Systems with constant or variable airflow rates
- Recommended for areas with a ceiling height between 3 and 6 m, which need air conditioning
- Restaurants

•

Benefits

- Optimal airflow
- Low acoustic power
- Rapid reduction of speed and temperature variations caused by high induction
- Twice the induction of a conventional 4-directional diffuser
- Possibility of reducing the total airflow up to 25% in various spaces

Configurations

The DRS is available in seven nominal sizes which that can meet specific flow, performance parameters and comfort requirements.

The DRS is mounted directly on the air duct with the help of a spigot or a plenum. It can be incorporated in a round or a standard sized square plate (12" x 12" or 24" x 24").

The diffuser will be powder coated with a polyester TGIC-free paint, providing a smooth, easy-to-clean, chip and fade resistant finish. The colours are available from the RAL colour chart.

DRS - R - 100

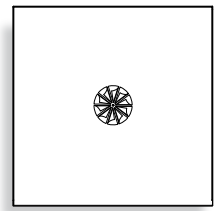

DRS - Q - 100/603

DRS - Q - 100/299

DRS - R - 125

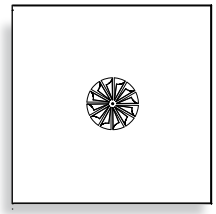

DRS - Q - 125/603

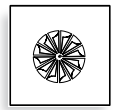

DRS - Q - 125/299

DRS - R - 180

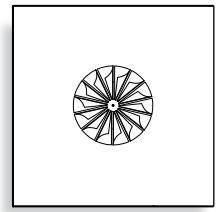

DRS -Q - 180/603

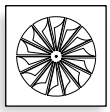

DRS -Q - 180/299

DRS - R - 215

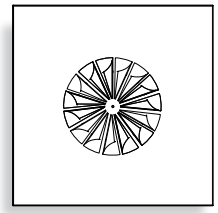

DRS - Q - 215/603

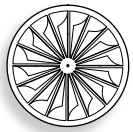

DRS - R - 250

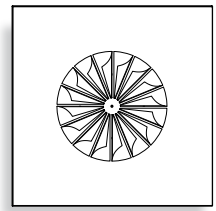

DRS - Q - 250/603

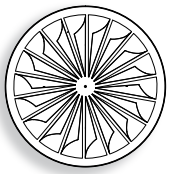

DRS - R - 315

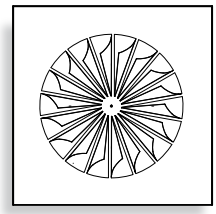

DRS - Q - 315/603

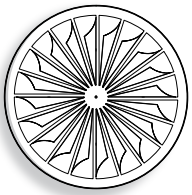

DRS - R - 355

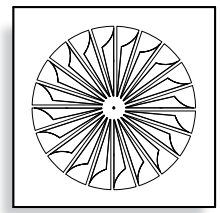

DRS - Q - 355/603

Composition, mode of operation

Composition of the DRS

The DRS diffuser is composed of a frontal plate (1) with blades which extend to the outlet of the diffuser (2). The diffuser is secured with a hidden central screw (3).

Mode of operation

The blades separate the flow of air into a number of smaller high induction airflows.

The blades at the outlet of the diffuser guarantee consistent horizontal airflow while offering a cooling rate to a minimum of 25% in VAV.

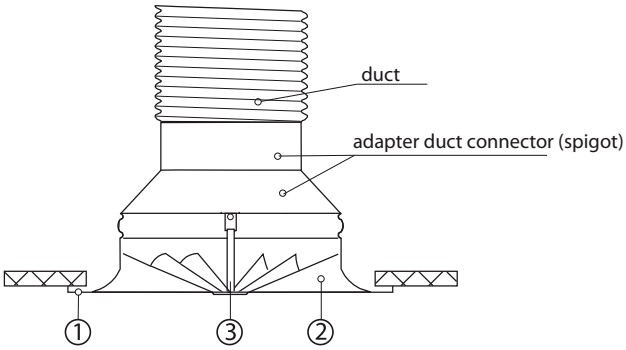

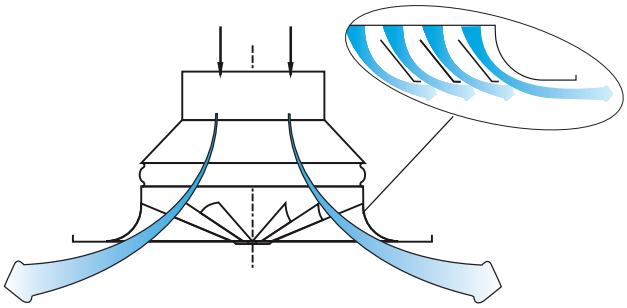

Thibault-GM Sport Complex, Sherbrooke, Canada

DRS Ranges of application and quick selection

Height of the room	Airflow by area m³/h/m²	Airflow by area cfm/sq.ft	Nominal dimension DN	Number of diffusers	Airflow by diffuser m³/h	Airflow by diffuser cfm	Min. space diffusers (2x) (m)	Min. wall space (m)	X crit (m)	Pressure drop ΔP (Pa)	Sound level Lw (dBA)	Noise criteria NC (dB)**
2.44 m (8 ft) 1	9	0.5	DN 180	6	152	90	1.9	1.3	1.6	17	< 25	-
	15	0.8	DN 215	6	244	143	2.3	1.5	1.3	13	< 25	-
	27	1.5	DN 250 3	9	206	120	2.2 6	1.4 7	1.1	9	< 25	-
	37	2 2	DN 250	12	305	179	5.0	2.3	1.5	20	26	-
2.74 m (9 ft)	9	0.5	DN 180	6	152	90	1.1	1.0	1.6	17	< 25	-
	15	0.8	DN 215	6	244	143	1.8	1.3	1.3	13	< 25	-
	27	1.5	DN 250	9	305	179	3.9	2.4	1.5	20	< 25	-
	37	2	DN 250	12	305	179	4.0	2.5	1.5	20	< 25	-
3.05 /3.4 m (10/11 ft)	9	0.5	DN 180	6	152	90	0.4	0.7	1,6	17	< 25	-
	15	0.8	DN 215	6	244	143	1.9	1.2	1.3	13	< 25	-
	27	1.5	DN 315	6	457	269	5.2	3.2	1.3	19	< 25	-
	37	2	DN 315	6	609	358	8.5	4.7	1.7	34	35	18
3.66 / 4.6 m (12/15 ft)	9	0.5	DN 215	4	228	134	2.7	2.1	1.5	26	< 25	-
	15	0.8	DN 250	4	366	215	3.0	2.2	1.8	29	30	15
	27	1.5	DN 315	6	457	269	3.6	2.5	1.3	19	< 25	-
	37	2	DN 315	8	457	269	3.7	2.6	1.3	19	< 25	-
4.88 / 5.8 m (16/19 ft)	9	0.5	DN 315	2	457	269	0.4	1.3	1.3	19	< 25	-
	15	0.8	DN 315	3	487	287	1.2	1.6	1.4	22	27	-
	27	1.5	DN 355	4	685	403	3.5	2.8	1.4	29	28	15
	37	2	DN 355	5	731	430	4.4	3.2	1.5	32	30	18
6.10 m (20 ft)	9	0.5	DN 315	2	457	269	0.1	0.1	1.3	19	< 25	-
	15	0.8	DN 355	2	731	430	1.1	2.0	1.5	32	30	18
	27	1.5	DN 355	4	685	403	0.5	1.7	1.4	29	28	15
	37	2	DN 355	4	914	538	4.7	3.8	1.9	49	35	23

Columns relative to all areas of that height with the same volume of air, by diffuser (isothermal values).
We recommend that a high induction swirl jet air diffuser is used in this case.
Column in reference to the example

* The absorption of the room is not considered. ** Determined by considering a room absorption of 10 dB.

Specifications:
- Room: L x W x H = 10 m x 10 m x 2,44m (33 ft x 33 ft x 8 ft)
- Total airflow in the room: 1080 cfm 4
- Initial temperature ratio: ΔT = -10° C
- Air velocity at 0.15 m/s (30 ft/m) at 1.3 m (4.25 ft) from the floor
- VAV: 25%

From the height of the ceiling 1 and the air flow by area (m² or square feet) 2 select the nominal dimension (DN) of the DRS. 3 Divide the total airflow of the room 4 by the ideal value of airflow. 5 Adjust the quantity of diffusers for symmetry in your area to ensure the maximum airflow within the optimum range.
Maintain the minimum distance between the diffusers 6 and the minimum distance from the walls. 7

Diffusers location view

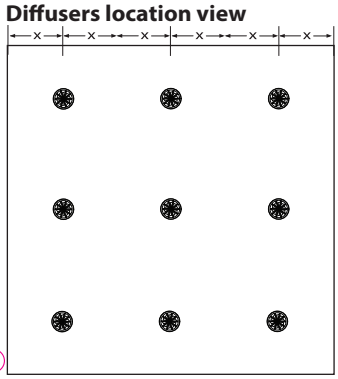

Air jet trajectory view

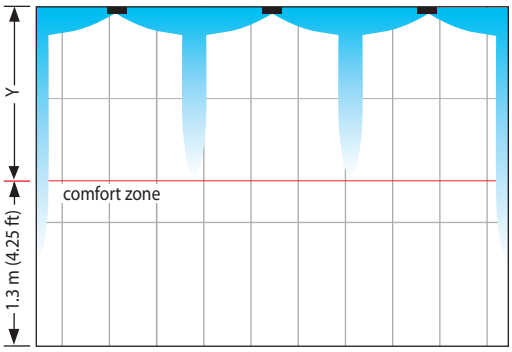

Grid scale: 1 m Blue : Air Velocity ≥ 0.15 m/s

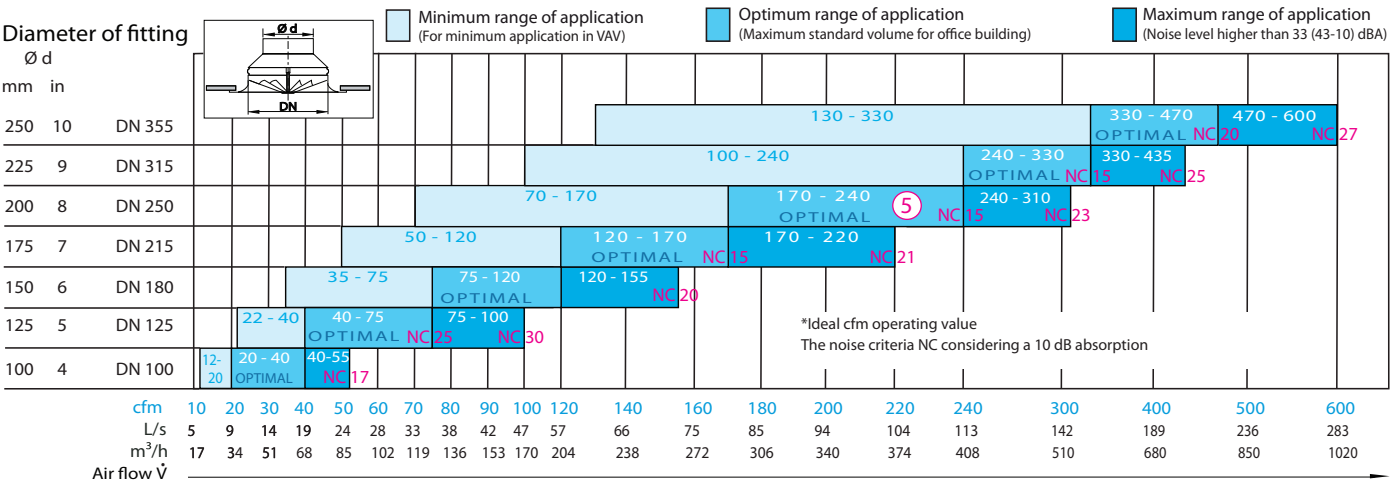

Diagrams of performance
Distance in isothermal flow

In free suspension, the airspeed reduces by a factor of 0.7.

Attention:
The noise criteria and acoustic power L_{WA} are determinated while considering a room absorption of 10 dB.

The graph values are based on an isothermal flow.

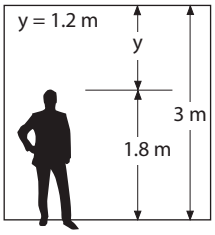

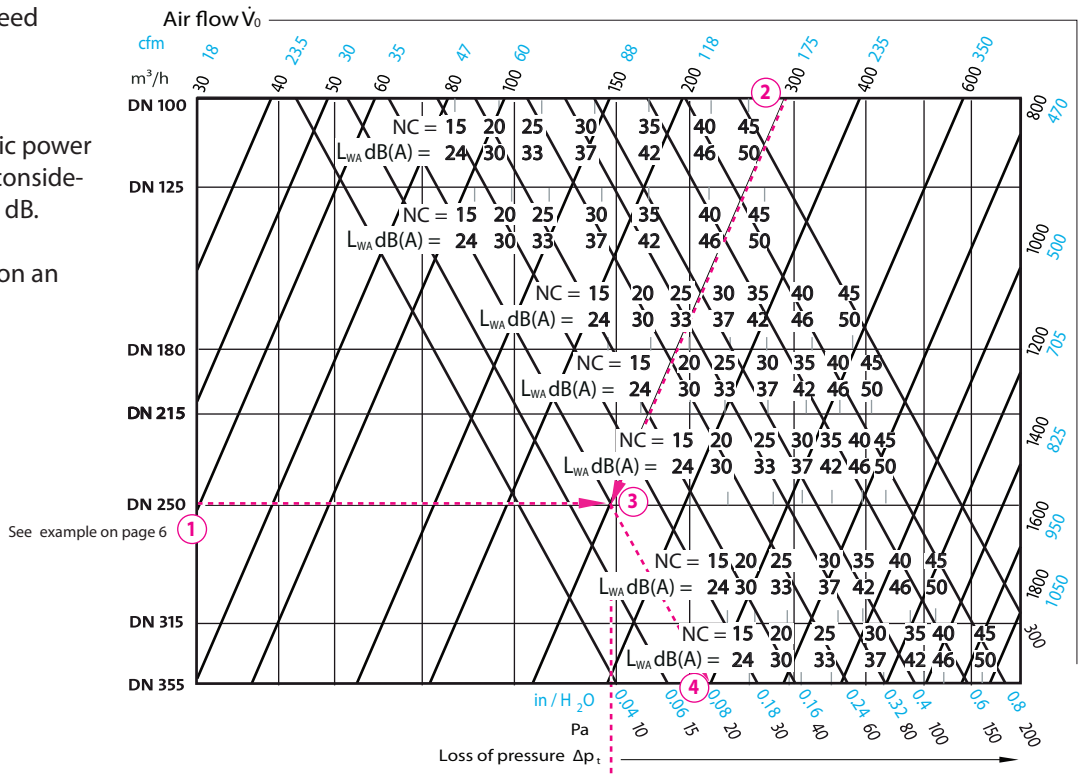

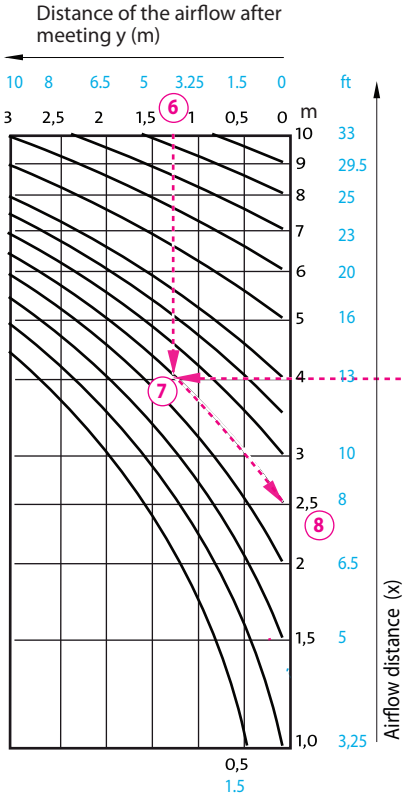

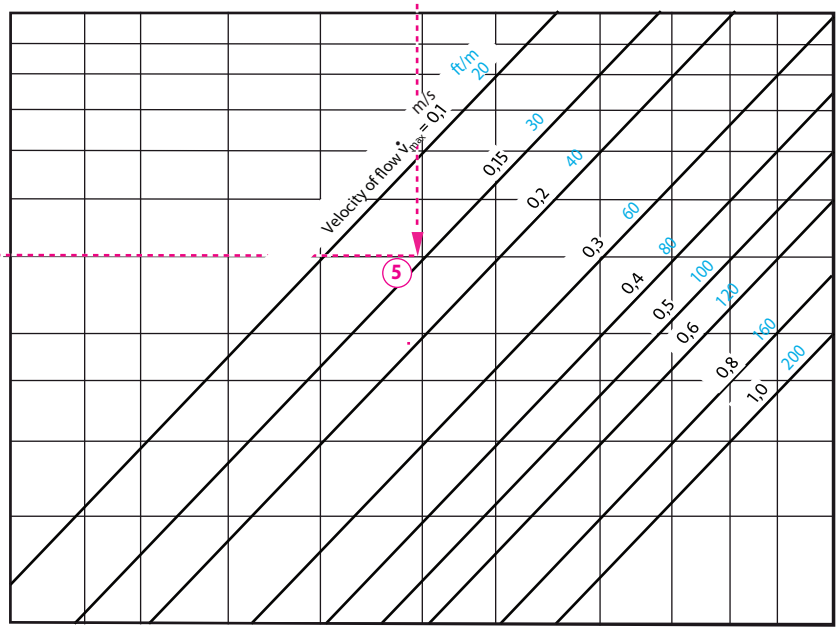

Performance diagrams
Critical trajectory of cooling airflow

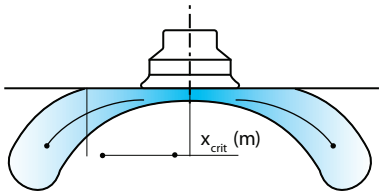

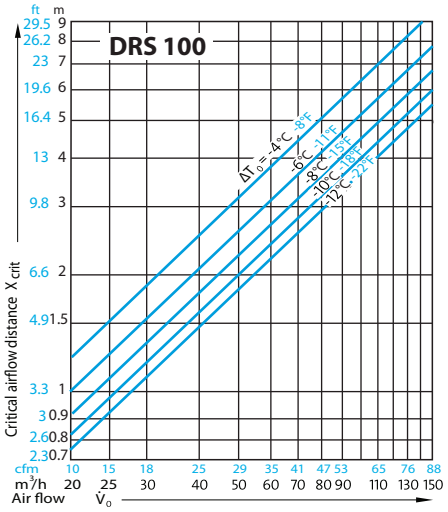

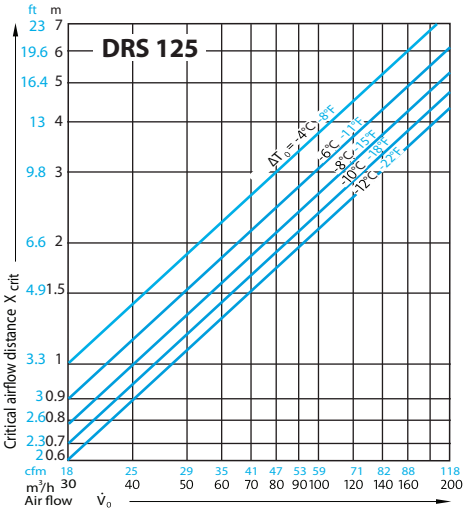

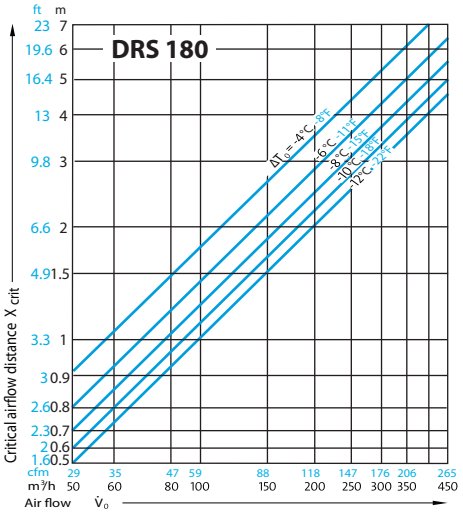

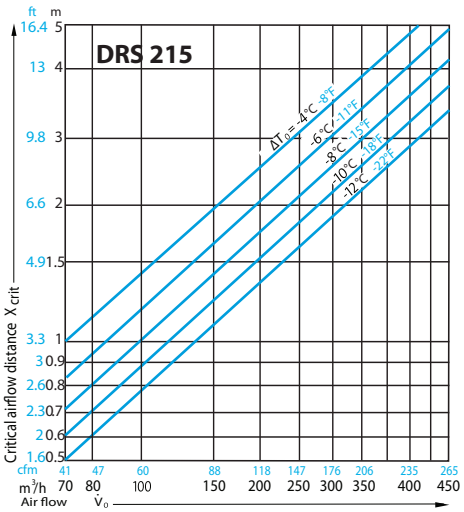

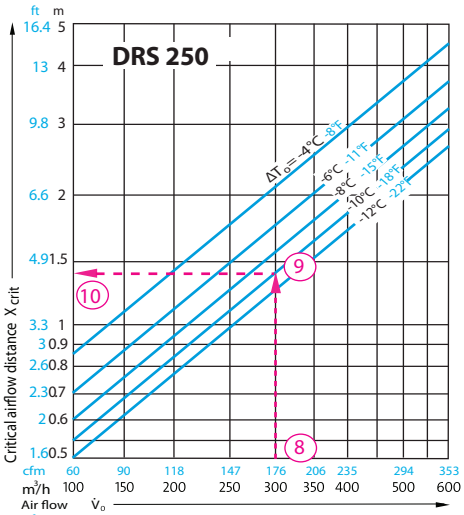

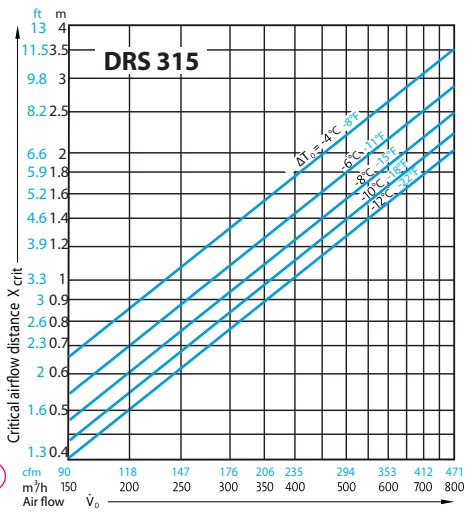

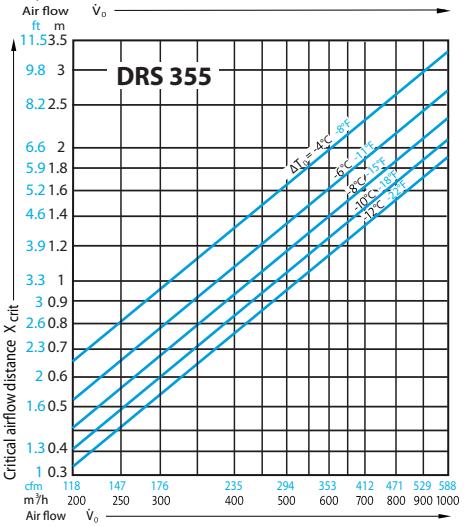

Example

Specifications:

- Height of the space: H = 3.0 m
- Airflow/diffuser: $\dot{V}_0$ = 300 m³/h
- Max cooling: ΔT_0 = - 10°C
- Max air speed at 1.8 m high: V_{max} = 0.2 m/s

Required:

1. Dimension of the diffuser.
2. Noise Criteral NC and Acoustic power L_{WA}.
3. Loss of pressure.
4. Minimum clearance between two diffusers.
5. Critical airflow trajectory (distance at which the airflow unsticks from the ceiling in cooling mode).

Solution:

1. From the table " areas of application " we find the nominal dimensions of the DN 250. (1)

2. For a DN 250 diffuser and an airflow of 300 (m³/h): (2)
   - Noise criteria NC = 15
   Acoustic power L_{WA} = 25 dB (3)

3. Loss of pressure: 20 Pa (4)
4. For y = H - 1.80 = 3.0 m - 1.8m = 1.20 m (6)
   minimum clearance: 2 x 2.5 = 5.0 m (8)

5. From the diagram " Critical trajectory of cooling airflow " for a DN 250 with an airflow of 300 (m³/h) and cooling of -10°C, (9) we obtain a critical trajectory of 1.4 m. (10)

Dimensions

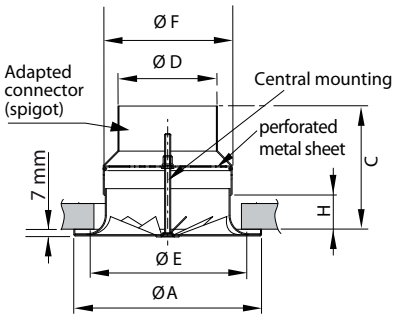

DRS R
Installed in a gypsum ceiling with a connection adapter (spigot)

Dimensions	DN 100	DN 125	DN 180	DN 215	DN 250	DN 315	DN 355
Cote ØA	155	185	280	335	380	490	550
Cote C	96	112	119	143	143	169	185
Cote ØD	100	125	150	175	200	225	250
Cote Ø E	120	150	245	300	345	455	515
Cote Ø F	100	125	180	215	250	315	355
Cote H	12	14	24	24	28	38	40

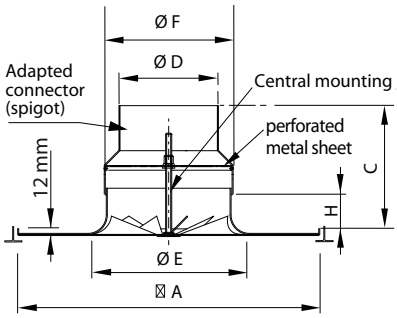

DRS Q
Installed in a suspended ceiling with an adapted connector (spigot)

Dimensions	DN 100	DN 125	DN 180	DN 215	DN 250	DN 315	DN 355
Size ⊠ A	299 - 603	299 - 603	299 - 603	299 - 603	603	603	603
Size C	96	112	119	143	143	169	185
Size Ø D	100	125	150	175	200	225	250
Size Ø E	120	150	245	300	345	455	515
Size Ø F	100	125	180	215	250	315	355
Size H	6	7	18	18	22	32	34

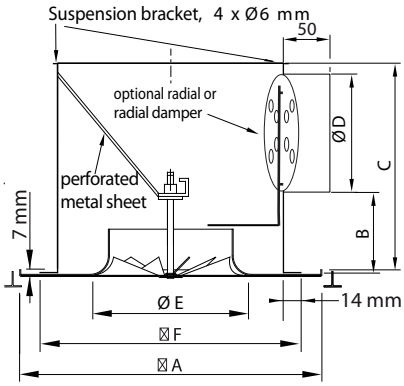

DRS Q
Square plenum - side inlet

Dimensions	DN 100	DN 125	DN 180	DN 215	DN 250	DN 315	DN 355
			Plenum DAL 358 DN 400	Plenum DAL 358 DN 500		Plenum DAL 358 DN 600	
Size ⊠ A	299 - 603	299 - 603	299 - 603	603	603	603	603
Size B	33	33	76	83	83	72	72
Size C	170	170	251	312	312	347	347
Size Ø D	100	125	150	200	200	250	250
Size Ø E	120	150	245	300	345	455	515
Size ⊠ F	150	200	274-387	488	488	584	584

We only recommend installing a balancing damper in the air duct is in gypsum ceiling applications.

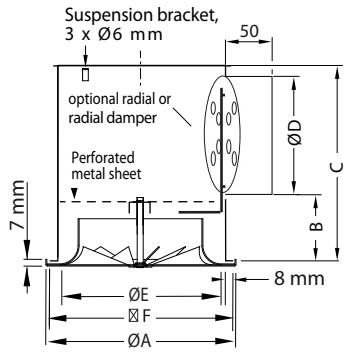

DRS R
Round plenum - side inlet

Dimensions	DN 100	DN 125	DN 180	DN 215	DN 250	DN 315	DN 355
Size A	155	185	280	335	380	490	550
Size B	33	33	76	83	83	72	72
Size C	171	171	251	302	302	348	348
Size Ø D	100	125	150	200	200	250	250
Size Ø E	120	150	245	300	345	455	515
Size F	150	165	275	330	360	470	530

We only recommend installing a balancing damper in the air duct is in gypsum ceiling applications.

Fireproof damper

Square Plenum

			DN 400	DN 500		DN 600	
DN	**100**	**125**	**180**	**215**	**250**	**315**	**355**
Size A	603	603	603	603	603	603	603
Size C	400	400	400	500	500	560	560
Size ØD	100	125	150	200	200	250	250
Size F	396	396	396	488	488	584	584

Note : Balancing damper not available with fireproof damper.
Available only with square diffuser.

Classified ULC (Underwriters laboratories of Canada), the NAD Klima diffusers with fire resistant dampers have a fire-resistant rating of 3 hours.

The fire-resistant damper is integrated directly to the plenum. This assembly is designed for installation in either a suspended or gypsum ceiling.

LISTED
Air Terminal Unit
R38924
CAN/ULC - S112.2 et CAN/ULC - S101

CEILING AIR DIFFUSER
FIRE RESISTANCE CLASSIFICATION
ANSI/UL 555C et ANSI/UL 263

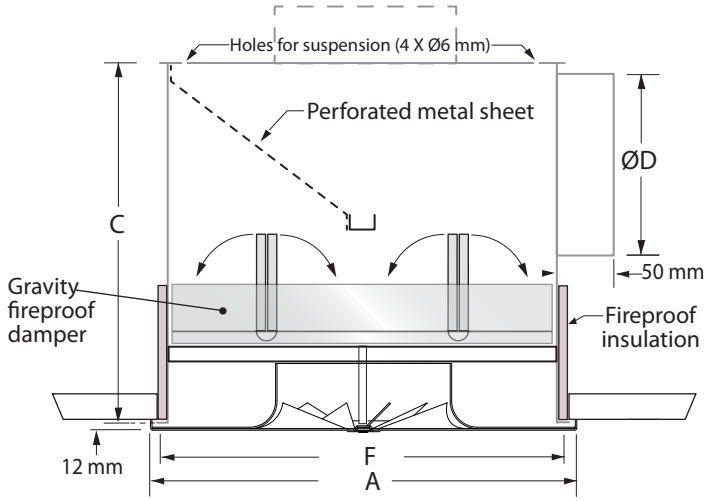

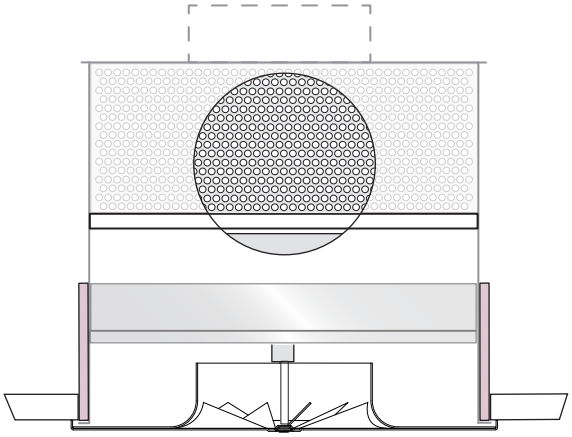

Correction factor of air flow when reading the balometer (type Alnor 9407)

To ensure adequate balance of the DRS air diffusers, it is recommended to use correction factors for an airflow equivalent to the resistance generated by a balometer.

The factors are valid for a ventilation system composed of at least three (3) diffusers after one unit or a VAV box. For less than three (3) diffusers with an automatic airflow regulator, the factors are less than indicated.

As indicated in the ALNOR manual "Appendix B – Capture Hood Flow Resistance", it is recommended by the manufacturer of the instrument to take a reading of the air duct you than compare it with the flow under the diffuser with and without the balometer to determine the correction factor.

To avoid this procedure, we have provided the factors of correction with all of the DRS diffuser models.

For the **DRS DN 100** and the **DRS DN 125** the correction factor is 1.00.

Warning!

An electronic balometer calculation is able to generate its own correction factors. For these models of balometers, when used with a helical effect diffuser such as the DRS, a stabilizing cross must be installed inside the balometer. Without the cross, it is possible to obtain a reading up to 40% higher than the actual rate.

Confirm with the balometer users guide.

DRS - DN 180

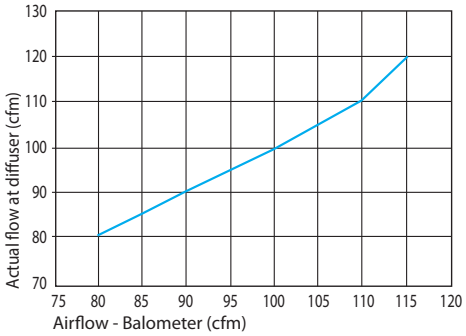

Balometer (cfm)	80	90	100	110	115
Factor	1,00	1,00	1,00	1,00	1,04
Actual flow (cfm)	80	90	100	110	120

DRS - DN 215

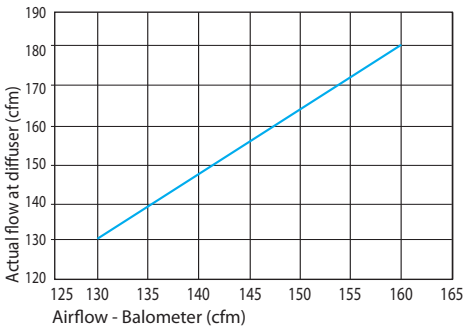

Balometer (cfm)	130	135	140	145	160
Factor	1,00	1,04	1,07	1,10	1,13
Actual flow (cfm)	130	140	150	160	180

DRS - DN 250

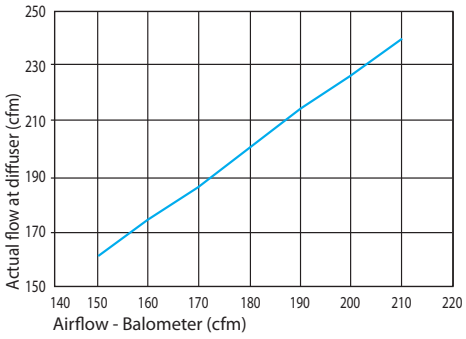

Balometer (cfm)	150	165	180	195	210
Factor	1,07	1,09	1,11	1,13	1,14
Actual flow (cfm)	160	180	200	220	240

DRS - DN 315

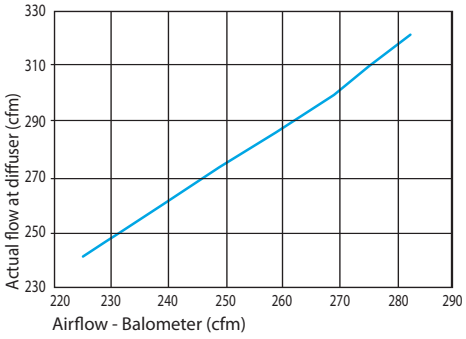

Balometer (cfm)	225	240	255	270	282
Factor	1,07	1,08	1,10	1,11	1,13
Actual flow (cfm)	240	260	280	300	320

DRS - DN 355

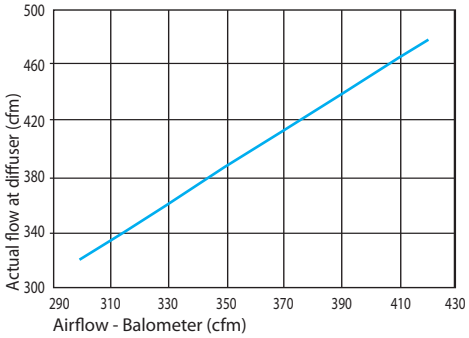

Balometer (cfm)	300	330	360	390	420
Factor	1,07	1,09	1,11	1,13	1,14
Actual flow (cfm)	320	360	400	440	480

Specifications

1. Description and physical characteristics

1.1 The high induction swirl airflow diffuser shall be made of 20 ga. galvannealed steel. The round or square front plates shall be equipped with bent blades.

1.2 The blades shall extend to the diffuser's outlet and shall guarantee a horizontal airflow on 360 degrees even in a freely suspended diffuser.

1.3 The front plate of the diffuser shall be adapted for use in standard suspended ceilings or gypsum ceilings.

1.4 The diffuser shall be powder coated with a polyester TGIC-free paint, providing a smooth, easy-to-clean, chip and fade resistant finish. The architect or client shall choose a standard colour from the RAL colour chart.

2. Performance

2.1 The performance shall be guaranteed by using performance curves or simulation software for critical areas. These shall indicate the pressure drop, acoustic power generated as well as showing a cross-sectional view illustrating the critical airflow path in cooling, isothermal and heating modes.

2.2 **Parameters of guaranteed comfort**

2.2.1 The performance statistics of the diffuser shall reflect a maximum air speed of 0.15 m/s (30 ft/m) in occupied zone at 1.3 m (4 ft) from the floor. The performance guarantee shall be demonstrated in plan view, with circles showing the path of the air stream.

2.2.2 The diffuser shall ensure a maximum variant in temperature of -1°C between the air jet and the area occupied within 4 ft (1.3 m) from the floor. To achieve this, the ratio of temperature differential shall perform at a minimum of $\Delta T_{xy} / \Delta T_0 \leq 0.1$ (for an initial differential of $\Delta T_0 = -10^{\circ}C$).

2.2.3 In cooling, the diffuser shall guarantee, in variable volume (VAV), a critical distance (X_{crit}) of at least the rates indicated in the following table:

Diffuser inlet (in)	6	8	10	12
Air flow max. (pcm)	80-150	151-280	281-400	401-600
min. (pcm)	20-40	41-90	91-140	141-200
X critical - ft	1'- 7"	1'- 11"	2'- 3"	2'-7"
(m)	0.5	0.6	0.7	0.8

3. Spigot or plenum

3.1 The DRS shall be delivered with a spigot made and tagged by the manufacturer. The spigot shall be made of aluminum and include a perforated plate stabilizing theair flow. The spigot shall be sized to meet the required air flow.

3.2 The diffuser shall be delivered with a plenum made and tagged by the manufacturer. The plenum shall be made of 24 gauge galvanized steel and include a perforated plate stabilizing the air flow. It shall be hung by 4 points to respect seismic norms. The inlet collar shall be centered on the side or on the top of the plenum, and it shall be sized to meet the required air flow. The plenum's interior joints shall be sealed with COV emission free silicon.

3.3 The diffuser front plate shall be attached to the spigot or plenum with a central screw.

3.4 When required, the plenum shall be supplied with a damper adjustable through the front plate, in order to adjust the air volume. This damper shall be available in two options:

3.4.1 **Radial damper**: Key with circular pivoting blades on a flexible metallic cable, which is adjustable through the front plate of the diffuser, allowing for air flow adjustment from 0% to 100%.

3.4.2 **Axial damper**: Perforated swiveling flap, rotating from 0 to 90 degrees with a blocking system allowing for air flow adjustment from 25% to 100%.

4. Balancing

4.1 The DRS diffuser balancing shall be executed by a ventilation equalizing technician with a recognized professional certification.

4.2 The technician shall take into account the correction factor of air volume using a balometer (factor FCB).

5. Quality required: NAD Klima DRS model

Codification

DRS	**Product**
Q = Squared - R = Round	**Configuration**
100, 125, 180, 215, 250, 315, 355	**Nominal dimension**
603, RND (round), 299 according to mounting dimensions (603 = 24" X 24" T-bar)	**Dimension / plate**
9003 = white 9010 = cream 00SB = Solar Black (Standard Black Matte) 00SM = Silver Matte (Metallic Gray Standard) ____ = RAL color (write RAL color number)	**Diffuser color**
S = Spigot P = Square plenum with lateral input E = Round plenum with lateral input X = Without adapted connector (spigot) and without box	**Spigot / Plenum**
I = Acoustic insulation (plenum only) A = Acoustic insulation with closed cell (plenum only) X = without insulation	**Acoustic Insulation**
F = with fireproof insulation and fireproof damper (square plenum only) ((balancing damper not available) X = without fireproof insulation and fireproof damper	**Fireproof insulation**
D = With axial damper (for plenum with lateral inlet only) R = With radial damper (for plenum with top and side inlet) X = Without damper	**Balancing damper**
DRS - Q - 100 - 603 - 9003 - S - X - X - X	**Example**

Notes:

Blue: Standard equipment, in stock.
There is no balancing damper available for spigots.

nad KLIMA®

www.nadklima.com

NAD Klima (Head office)
144, rue Léger,
Sherbrooke, QC, J1L 1L9 Canada
T : 819 780-0111 • 1 866 531-1739
F : 819 780-1660s
info@nadklima.com

NAD Klima Ontario
2840, Argentia Road, Unit 6,
Mississauga, ON, L5N 8G4 Canada
T : 416-860-1067
ontario@nadklima.com

MADE IN CANADA