HOW NAD

Training

DAL358

- Ceiling diffuser: Square or Circular

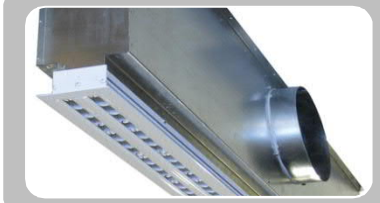

SAL35

- Linear diffuser

RRA

- Duct diffuser with slots

RDD

- Duct diffuser with perforation

What you need to know before you start?

- What type of application?
- What is the usage ? (heating/air conditionning/Ventilation)
- What is the installation height?
- Are there any obstacles?
- What is the total airflow rate?

DAL358

- Swirl airflow
- Square or circular front plate
- Plenum included

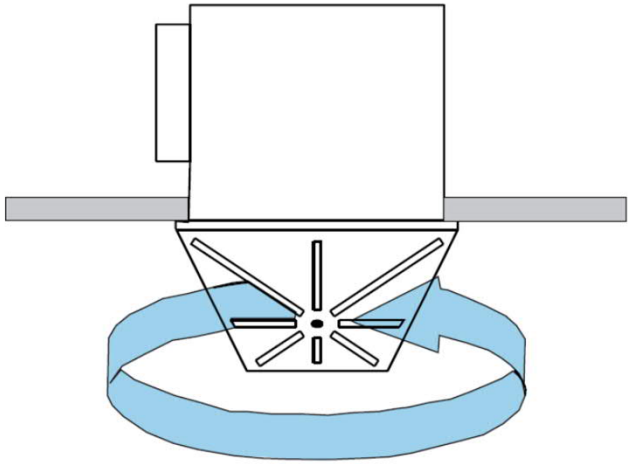

Video swirl airflow

DAL358

- 16x16 (400x400), 20x20 (500x500), 24x24 (603x603) ou 32x32 (800x800)
- Ø12 " (300), 16"(400), 20"(500), 24"(600) ou 32"(800),
- Gypsum Ceiling, T-bar or apparent (without ceiling)

Note : apparent ceiling Ø of front plate = Ø of diffuser

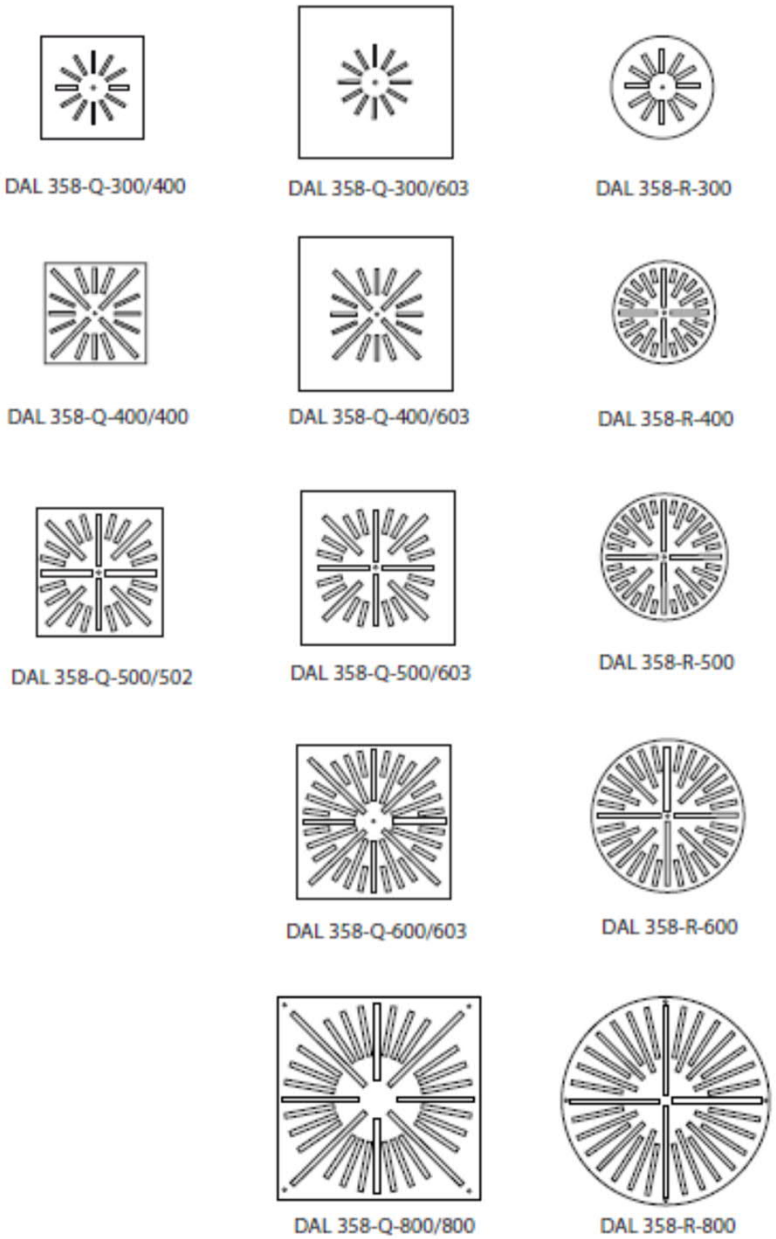

Useful information

DAL 358 square

Cote DN	300/400	500	600	800
Ø inlet	150 mm / 6 in	200 mm / 8 in	250 mm / 10 in	300 mm / 12 in
Weight (kg/lbs)	5.2/11.5	7.1/15.6	11.5/25.3	14.6/32.2

DAL 358 round

Cote DN	300/400	500	600	800
Ø inlet	150 mm / 6 in	200 mm / 8 in	250 mm / 10 in	300 mm / 12 in
Weight (kg/lbs)	4.2/9.3	6.2/13.7	8.5/18.7	14.1/31.3

Adaptability to the room

Avalable flow of air

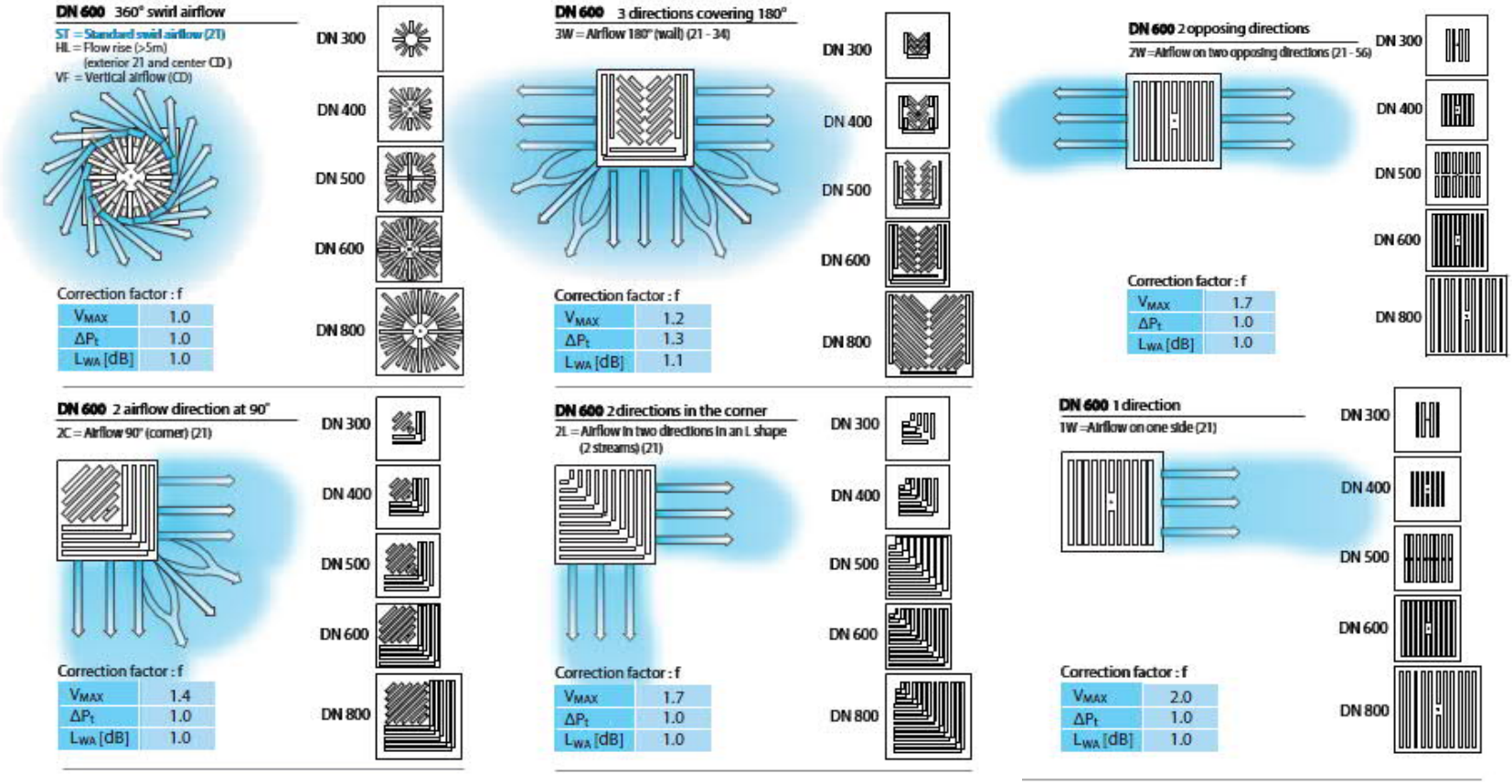

Adaptability to room

Custom Plenum available if required

Plenum with oval inlet

min height = Ø/2 + 60 mm (2-1/3 ”)
(45+15)

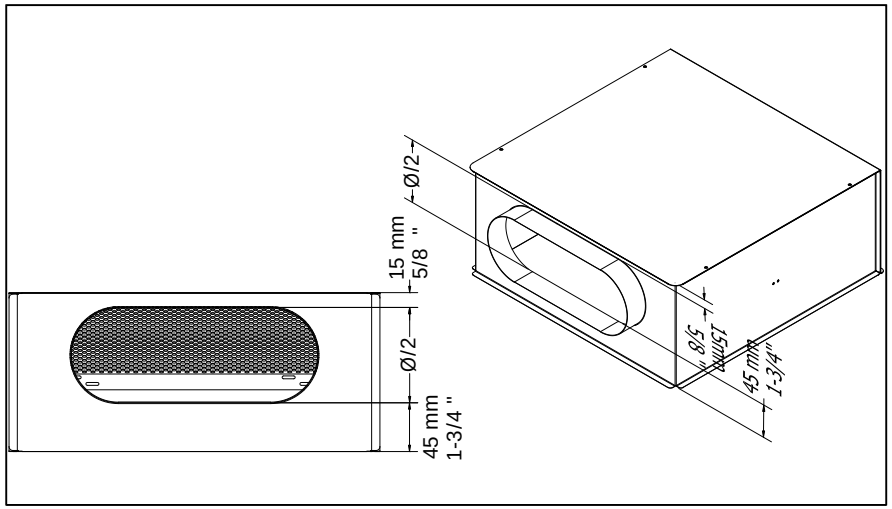

Plenum with round inlet

min height = Ø + 60 mm (2-1/3 ”)
(45+15)

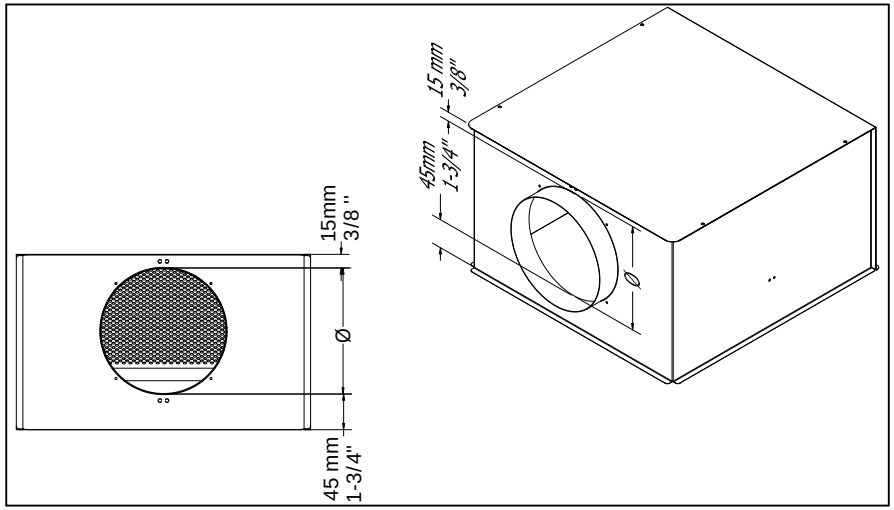

Custom made (architectural)

Quick selection

Height of the room	Air flow by surface		Nominal size	Quantity of diffusers	Airflow per diffuser		Min. distance diffuser	Min. distance wall	Critical X	Pressure difference	Acoustic Power level
	$m^3/h/m^2$	cfm/sq ft	DN		m^3/h	cfm	(m)	(m)	(m)	ΔP (Pa)	L_W(dBA)
2,44 m / 2,75 m (8/9 ft) (1)	9	0.5	DN 400	4	228	134	1.6	0.9	1.4	25	36
	15	0.8	DN 500	4	366	215	2.8	1.5	1.4	25	36
	24 (2)	1.3	DN 600 (3)	4	660	350	5.5 (6)	2.8 (7)	1.9	30	42
	30	1.6	DN 600	6	500	295	3.6	1.9	1.4	18	33
3,05 / 3,7 m (10/12 ft)	9	0.5	DN 400	4	228	134	0.4	0.3	1.4	25	36
	15	0.8	DN 500	4	366	215	1.5	0.9	1.4	25	36
	27	1.5	DN 600	4	685	403	4.6	2.4	1.9	32	43
	37	2	DN 600	6	609	358	3.7	1.9	1.7	26	39
4.0 / 4,3 m (13/14 ft)	9	0.5	DN 500	2	457	269	0.8	0.6	1.7	36	42
	15	0.8	DN 500	4	366	215	0.3	0.2	1.4	25	36
	27	1.5	DN 600	4	685	403	2.5	1.5	1.9	32	43
	37	2	DN 800	4	914	537	3.7	2.0	1.8	28	44

**L_W(dBA) : The absorption of the room is not considered.

Column for any room from that height at the same volume of air per diffuser
Column in reference to the example

Specifications :

- Room: L x W x H = 10 m x 10 m x 2.44m (33 ft x 33 ft x 8 ft)
- Total air flow in the room : 1400 cfm (4)
- Initial temperature difference: ΔT = -10°C
- Air velocity : 0.15 m/s (30 cfm) 1.3 m
- VAV : 25%

Using the data on ceiling height (1) and airflow rate by surface (m^2 or sq. ft.^{2}), (2) choose the nominal size (DN) of the DAL 358. (3) Divide the total airflow rate of the room (4) by the ideal value of the air flow rate for the selected size. Adjust the quantity of diffusers to achieve symmetry in the room while respecting the maximum airflow rate in the optimal setting range. (5) Watch for minimal distance between diffusers and between diffusers (6) and walls. (7)

Location of the diffusers

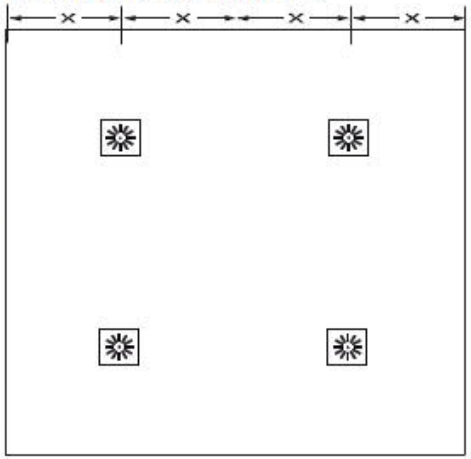

Airflow pattern - DN 600

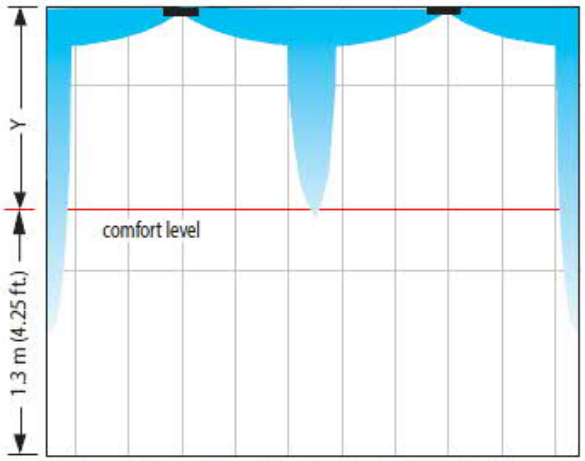

Scale grid: 1 m Blue: Air velocity >= 0.15 [m/s]

Range of application

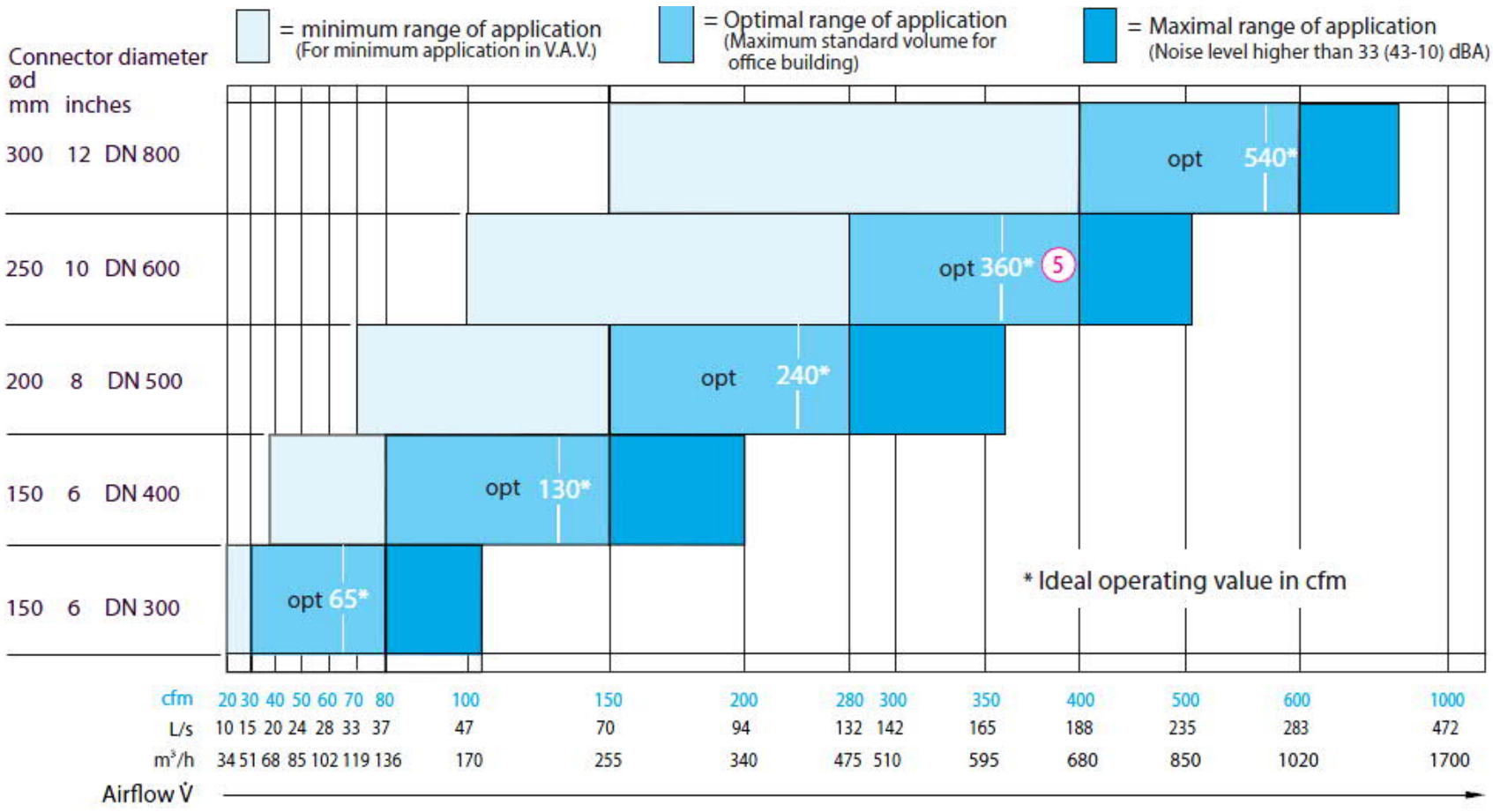

Simulation Software

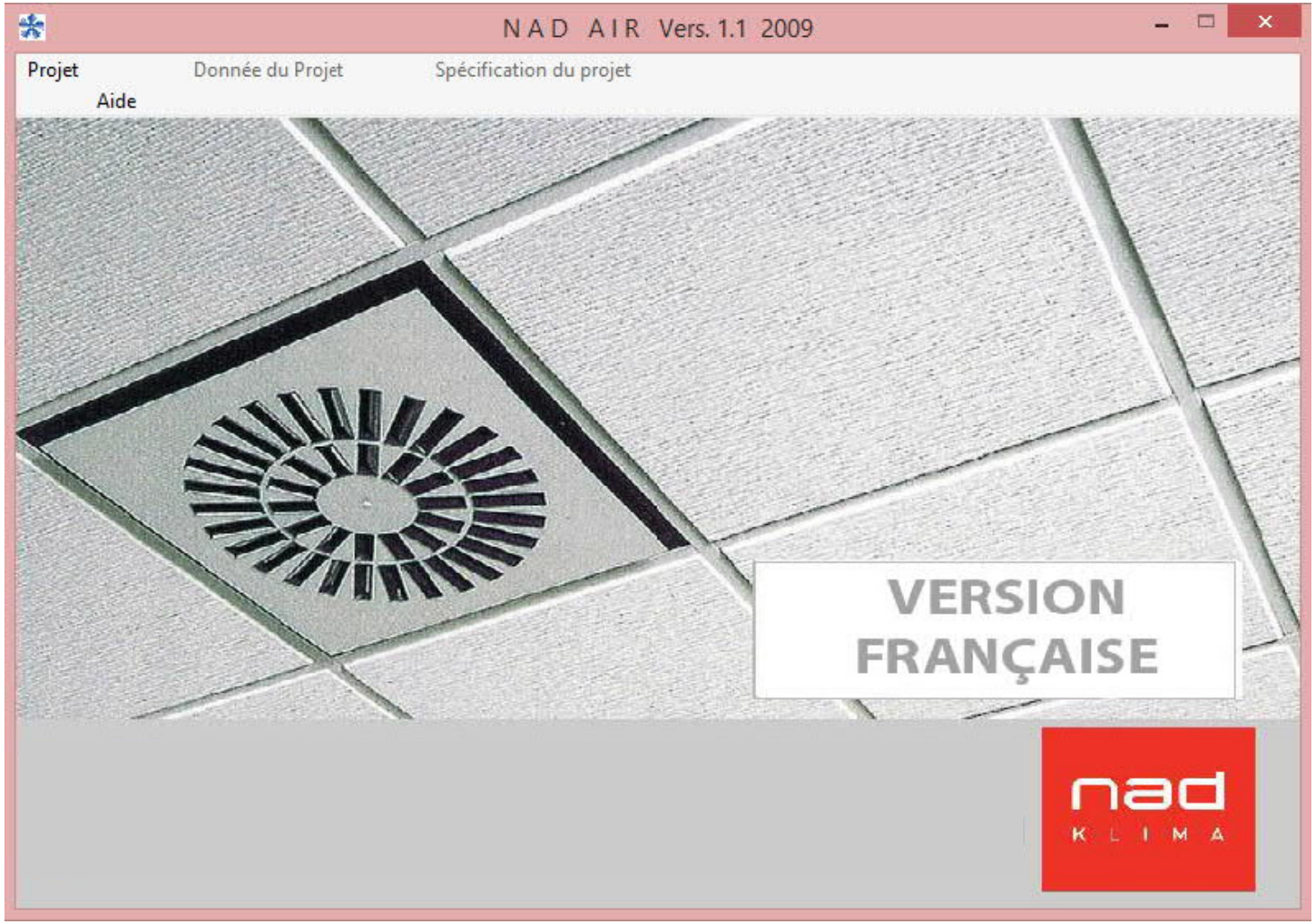

Characteristics of room and air jet

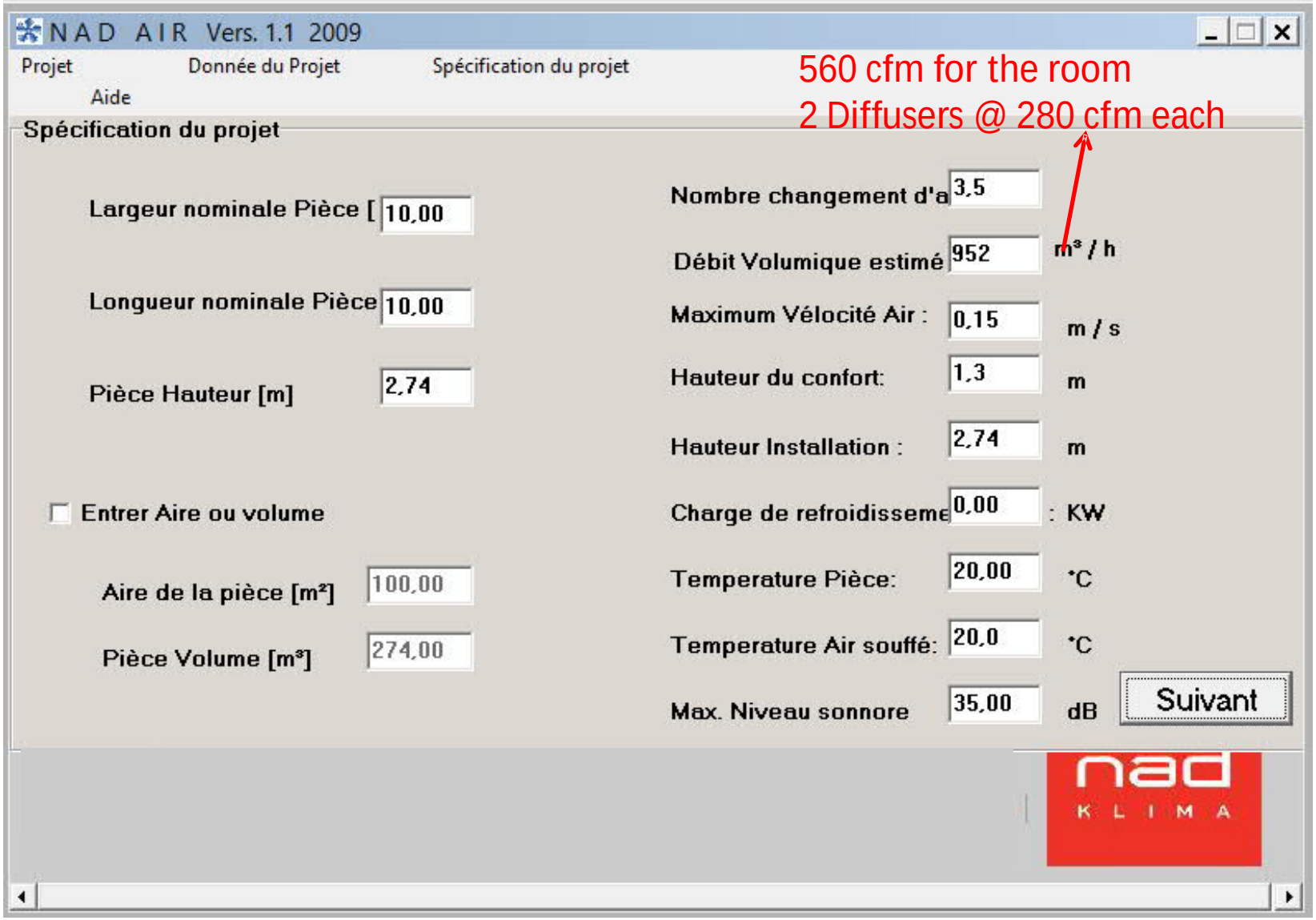

560 cfm for the room
2 Diffusers @ 280 cfm each

Choice of the diffuser and type of diffusion

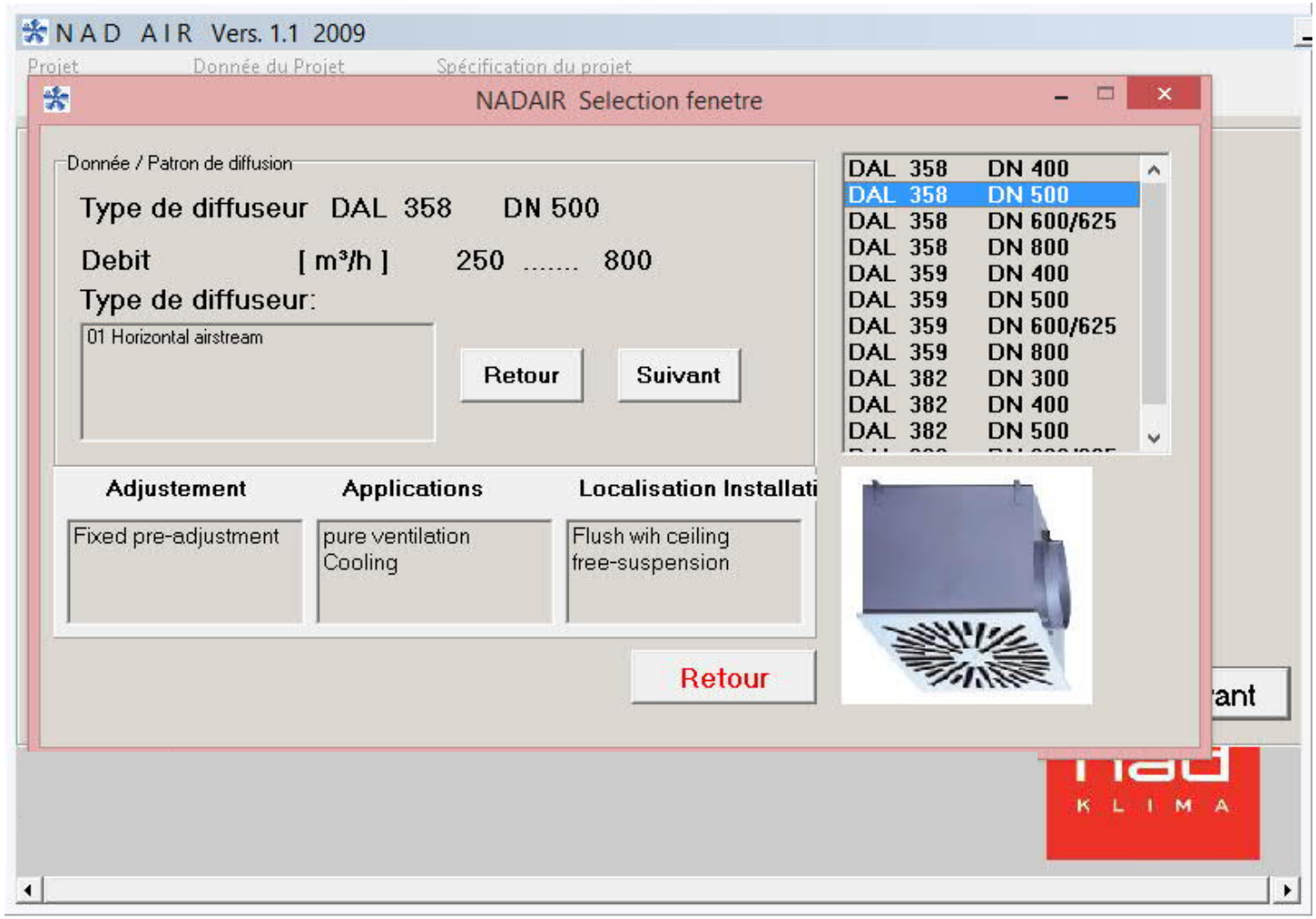

Simulation of air jet in the room

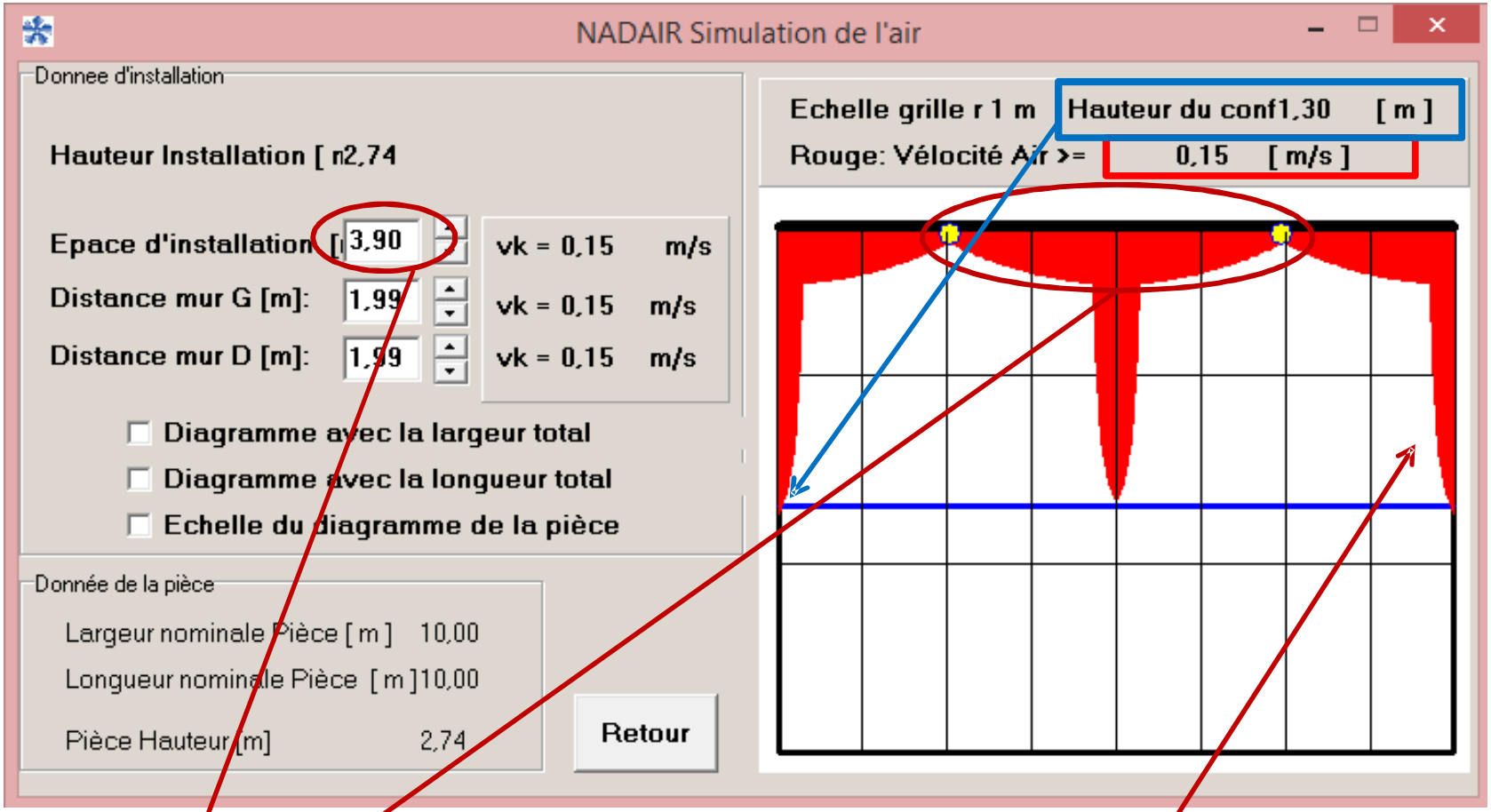

Distance between 2 diffusers = 3.9 m(13 ft)

Distance traveled by the air flow before reaching a velocity >= 0,15 m/s or 30 fpm

Graphic simulation

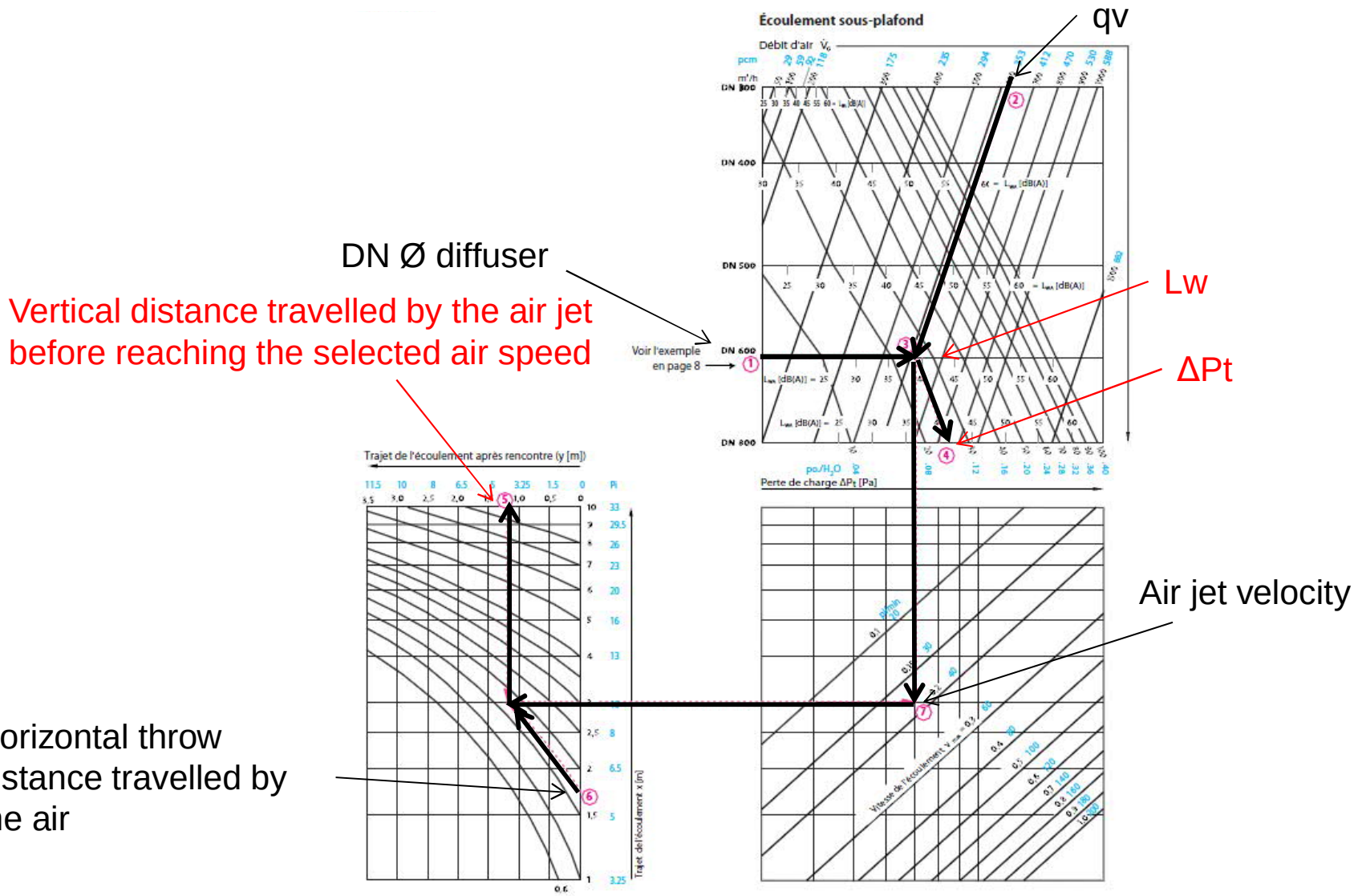

Rapid evaluation of critical zones

Critical zone : Occupied zone where the air flow speed exceeds 30 fpm (0,15 m/s)

NB : Occupied zone : 4,3 feet (1,3 m) off the floor, when seated also called comfort zone.

NAD Klima Has developed a graphic method of avoiding situations of discomfort

Rapid evaluation of critical zones

Cfm of diffuser

DN Ø of diffuser

installation height

Radius

DN 500 ③							
L/S	PCM	8'		① 9'		10'	
		m	in	m	in	m	in
71	150	0,8	30	0,5	18	0,2	6
75	160	0,9	33	0,6	22	0,3	12
80	170	1,0	39	0,7	28	0,4	16
85	180	1,1	43	0,8	31	0,5	20
90	190	1,3	49	1,0	39	0,7	26
94	200	1,4	53	1,1	41	0,8	31
99	210	1,5	59	1,2	47	0,9	35
104	220	1,6	63	1,3	51	1,0	39
108	230	1,8	69	1,4	55	1,2	45
113	240	1,9	73	1,6	61	1,3	49
118	250	2,0	77	1,7	65	1,4	53
123	260	2,1	83	1,8	71	1,5	59
127	270	2,2	87	1,9	75	1,7	65
132 ②	280	2,4	93	2,1 ④	81	1,8	69
137	290	2,5	96	2,2	85	1,9	75

DN 600							
L/S	PCM	8'		9'		10'	
		m	in	m	in	m	in
132	280	1,8	71	1,5	59	1,2	47
137	290	1,9	75	1,6	63	1,3	51
142	300	2,0	79	1,7	67	1,4	55
146	310	2,1	83	1,8	71	1,5	59
151	320	2,2	87	1,9	75	1,6	63
156	330	2,3	91	2,0	79	1,7	67
160	340	2,4	94	2,1	83	1,8	71
165	350	2,5	98	2,2	87	1,9	75
170	360	2,6	102	2,3	91	2,0	79
175	370	2,7	106	2,4	94	2,1	83
179	380	2,8	110	2,5	98	2,2	87
184	390	2,9	114	2,6	102	2,3	91
189	400	3,0	118	2,7	106	2,4	94
193	410	3,1	122	2,8	110	2,5	98
198	420	3,2	126	2,9	114	2,6	102

DN 800							
L/S	PCM	8'		9'		10'	
		m	in	m	in	m	in
189	400	2,5	96	2,1	83	1,9	73
196	415	2,6	100	2,3	89	2,0	79
203	430	2,7	106	2,4	94	2,1	83
210	445	2,9	112	2,5	98	2,3	89
217	460	3,0	116	2,7	104	2,4	94
224	475	3,1	122	2,8	110	2,5	98
231	490	3,2	126	2,9	114	2,7	104
238	505	3,4	132	3,1	120	2,8	110
245	520	3,5	138	3,2	126	2,9	114
252	535	3,6	142	3,3	130	3,1	120
259	550	3,8	148	3,5	136	3,2	124
267	565	3,9	154	3,6	142	3,3	130
274	580	4,0	157	3,7	146	3,4	134
281	595	4,2	163	3,9	152	3,6	140
288	610	4,3	167	4,0	156	3,7	146

Rapid evaluation of critical zones

Overhead view of room

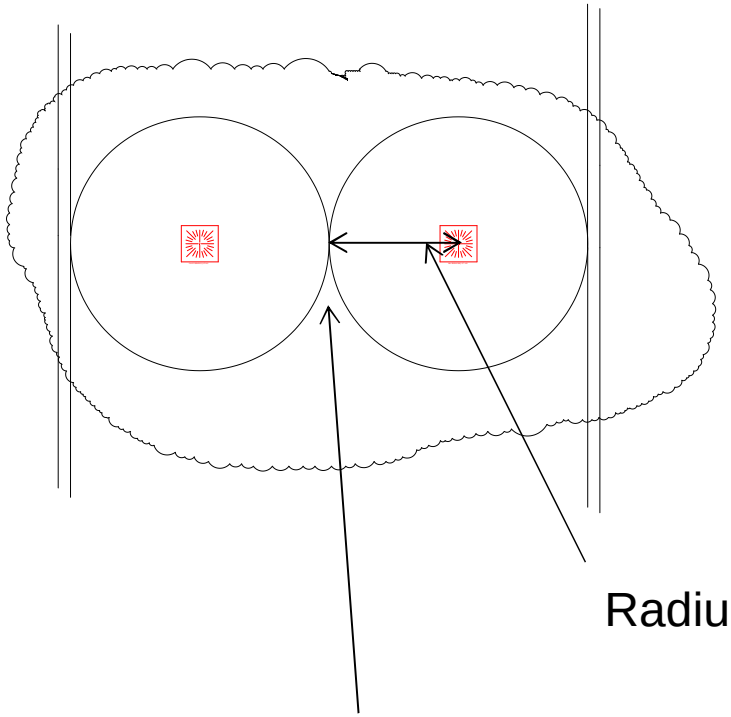

Sectional view of room

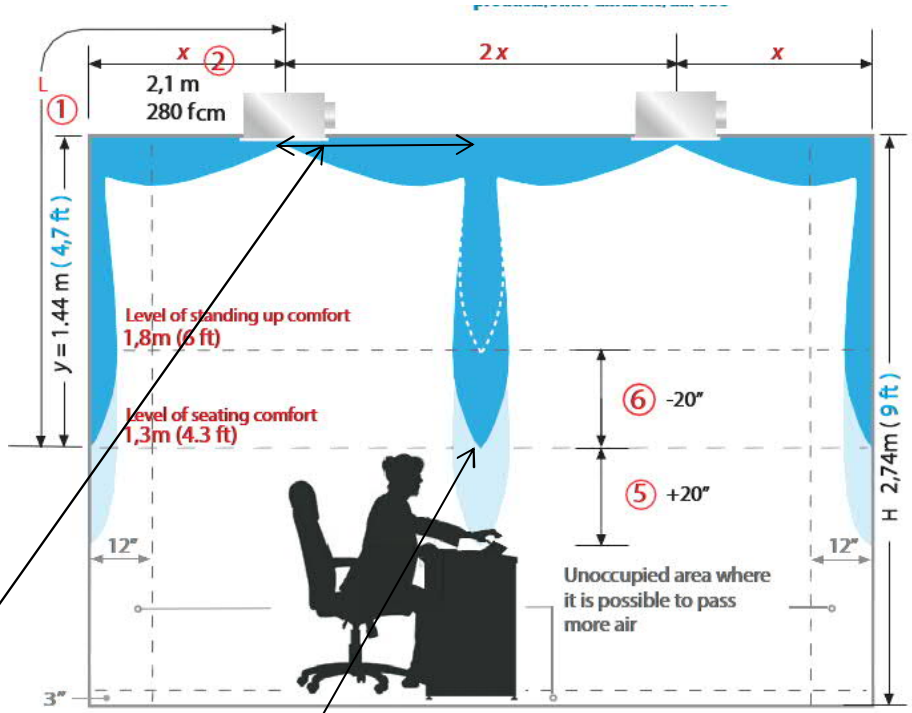

Radius

Both circles touch: speed of airflow at 4,3 ft = 30 fpm

Rapid evaluation of critical zones

Both circles overlap: penetration of airflow in the occupied zone at a speed greator than 30 fpm

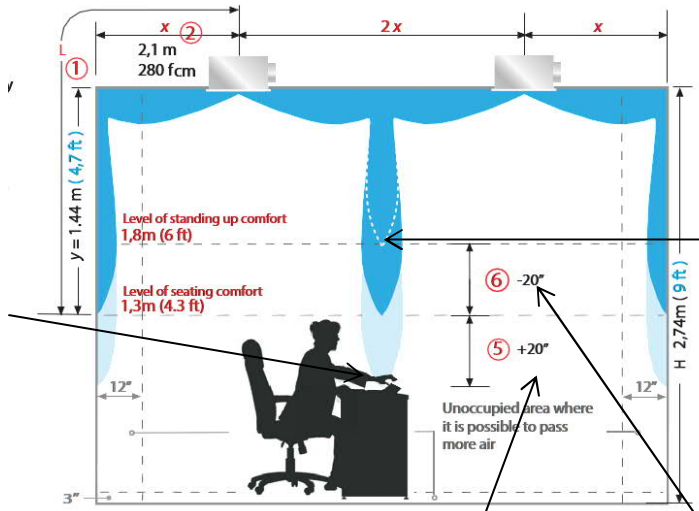

Both circles do not intersect : the air flow penetrates the occupied zone with a speed of less than 30fpm

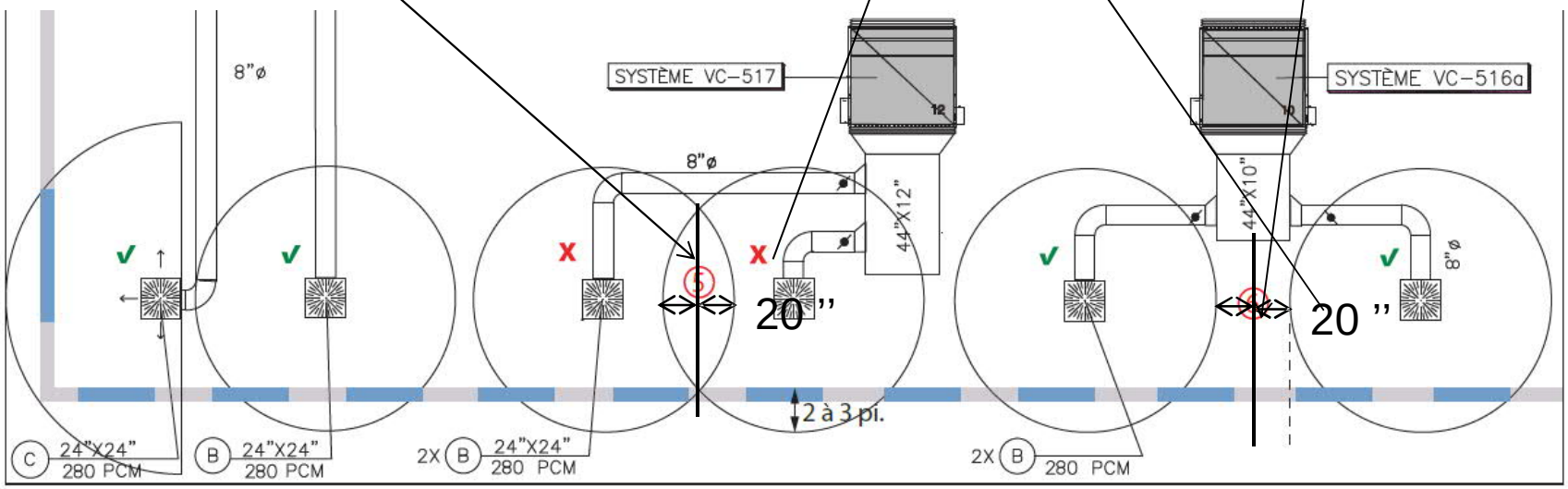

Rapid evaluation of critical zone

In the TOP view, NAD Klima has subtracted the vertical distance from the total throw of the diffuser.

Vertical Distance is the distance between the head of the occupant and the ceiling (1,3 m, 4 ft off the floor).

In order to obtain the Total Horizontal Throw at 30fpm, you have to add the Vertical Distance.

Example:

If Ceiling Height is 9’

Vertical Distance = 9’ – 4’ = 5’

You have to add 5’ or 60 to the horizontal radius of the Comfort Evaluation Circle.

NAD Comfort Evaluation Circle

Circle Representing Total Horizontal Throw at 30 fpm.

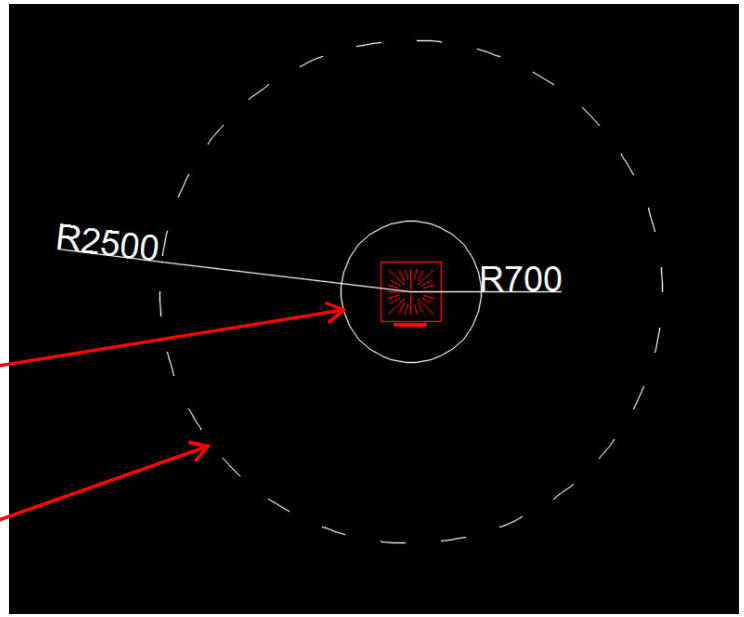

Sample with CAD

Room 10m x 10m (33x33 ft) at 2,44m (8')

4 DAL 358 DN 600 380 cfm each

DN 600							
L/S	PCM	8'		9'		10'	
		m	in	m	in	m	in
179	380	2,8	110	2,5	98	2,2	87

VIDEO SAMPLE

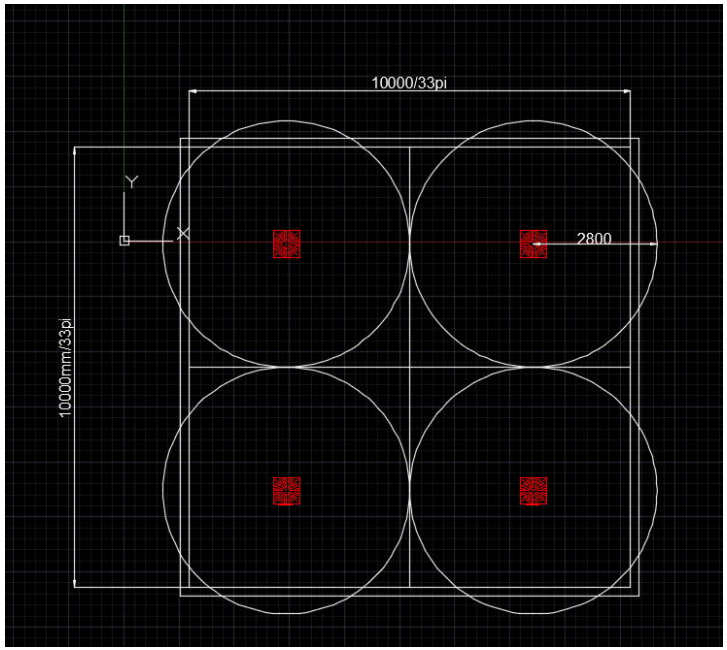

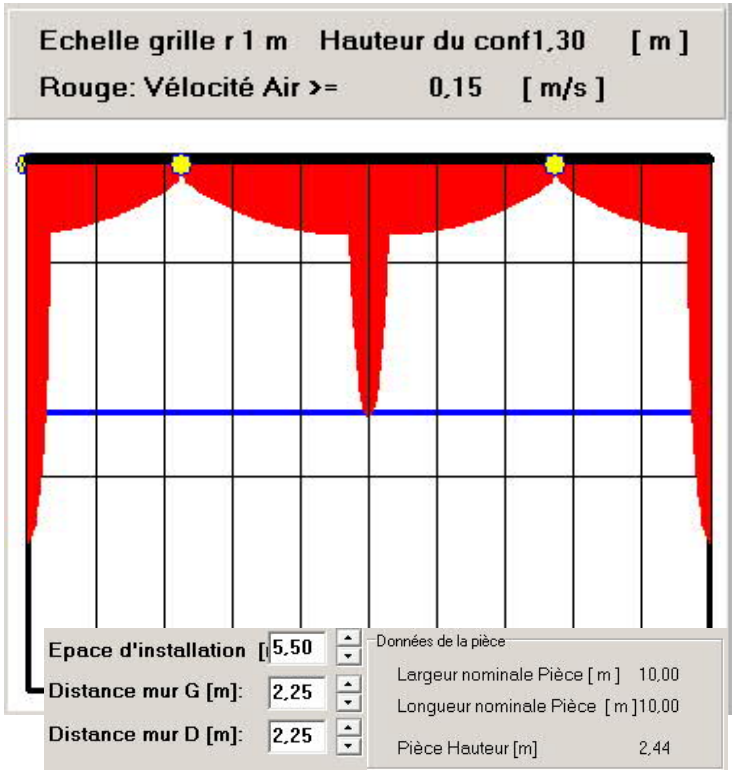

CAD block with circles available on www.nadklima.com

Technical spec chart NAD

NAD specifications DAL358

Identification	Manufacturer	Model	Comments
D1	NAD Klima	DAL358-Q-600-603-ST	1 , 2, 3, 4 , 5
D2	NAD Klima	DAL358-R-500-603-ST	1 , 2, 3, 4 , 5
D3	NAD Klima	DAL358-Q-500-603-ST	1 , 2, 3, 4 , 5
D4	NAD Klima	DAL358-Q-400-603-3W	1 , 2, 3, 4 , 5

Comments :

1 – Plenum with balancing damper must be supplied by the manufacturer.

2 – The color of the diffuser must be selected from the RAL chart , as well the colour of the rollers from our standard colors (withe, black, creme).

3 – The plenum with an acoustic insulation must be supplied by the manufacturer.

4 – The plenum is supplied with an inlet flange on TOP

5- The plenum with a radial damper must be supplied by the manufacturer.

Codification

DAL 358	Product
Q = Square R = Round	Configuration
300, 400, 500, 600, 800	Nominal dimension
400, 502, 603, 800 (603 for 24"X24" T-bar)	Outer size
ST = Standard helical airflow (21) HL = Flow rise (>5m) (exterior 21 and center CD) VF = Vertical airflow (CD) 1W = Airflow on one direction (21) 2W = Airflow in two opposing directions (21 - 65) 2L = Airflow in two directions in an L shape (21) 2C = 90° airflow (corner) (21) 3W = 180° airflow (wall) (21 - 65) RB = Roller nozzles (return)	Air flow
W = White roller and receptacle (RAL 9003) C = Cream roller and receptacle (RAL 9010) B = Black roller and receptacle X = Without roller	Drum and receptacle color
9003 = White 9010 = Cream 00SB = Solar Black (Standard black matte) 00SM = Silver Mat (Standard metallic grey) _____ = RAL color (write color number of RAL)	Diffuser color
S = Plenum with side inlet T = Plenum with top inlet X = Without plenum	Plenum
I = With acoustic insulation A = With closed cell acoustic insulation X = Without insulation	Acoustic insulation
F = With fireproof insulation et fireproof damper X = Without fireproof insulation et fireproof damper	Fireproof insulation
D = With axial damper (for side inlet only with standard adjustment) R = With radial damper (standard for top and side inlet) * X = Without damper	Balancing damper
DAL358 - Q - 300 - 603 - ST - W - 9003 - S - I - F - D Annotation	Example

Notes :
Blue : Standard, in stock
*Not available on oval collar

Technical Specs

Available online word and excel format
www.nadklima.com

1. Description and physical characteristics

1.1. The high induction swirl airflow diffuser will be made of 20 ga. mat finished steel. The round or square front plate has integrated eccentric adjustable rollers

1.2. The 100 mm long eccentric rollers will have an alpha-numeric identification which will permit the adjustment of the air flow pattern over 180 degrees.

The eccentric rollers meet the requirements of the National Building Code, Section 3.1.13.2, and certified according to the standard ASTME 162 "Surface Flammability of Materials Using a Radiant Heat Energy Source". Eccentric rollers are available in black, cream or white.

1.3. The diffuser's front plate is adapted to fit regular North American suspended ceilings or classic gypsum ceilings.

1.4. The diffuser plate is available for air flows of 1, 2 or 3 directional configurations as well as corner or "L" shapes.

1.5. The diffuser will be powder coated with a polyester TGIC-free paint, providing a smooth, easy-to-clean, chip and fade resistant finish. The architect or client may choose a standard colour from the RAL colour chart.

2. Performance

2.1. The diffusers' performance must be confirmed by simulation software for the critical area. This software indicates the pressure drop, acoustic power it generates as well as showing a cross-sectional view illustrating the critical airflow path in cooling, isothermal and heating modes.

2.2. **Parameters of guaranteed comfort**

2.2.1 The performance statistics of the diffuser should reflect a maximum air speed of 0.15 m/s (30 ft/m) in occupied zone at 1.3m (4 ft) from the floor. The performance guarantee shall be demonstrated in plan view with circles showing the path of the air stream.

2.2.2 The diffuser must ensure a maximum variant in temperature difference of -1°C between the air jet and the area occupied in 4 ft (1.3 m) from the floor. To achieve this, the ratio of temperature differential must perform at minimum of $\Delta T_{xy} / \Delta T_0 \leq 0.1$ (for an initial differential at $\Delta T_0 = -10°C$).

2.2.3. In cooling, the diffuser must guarantee in variable volume (VAV) a critical distance (X_{crit}) of at least that which is indicated in the following table :

Diffuser inlet in.	Air flow maximum cfm	Air flow minimum cfm	X critic ft. (m)
6	80 - 150	20 - 40	1'-7" (0,5)
8	151 - 280	41 - 90	1'-11" (0,6)
10	281 - 400	91 - 140	2'-3" (0,7)
12	401 - 600	141 - 200	2'-7" (0,8)

3. Plenum

3.1. The diffuser is delivered with a plenum made and tagged by the diffuser's manufacturer. The plenum is constructed from 24-gauge galvanized steel and includes a perforated stabilizing (equalizing) plate which regulates the airflow rate. Four suspension points which adhere to paraseismic standards are integrated in the plenum. The inlet is centered on the side or on the top of the plenum, and its size is calibrated to accommodate the airflow rate. The joints of the plenum are sealed with caulking which is free of VOC (volatile organic compounds) emissions.

3.2. The diffuser front plate will be attached to the plenum by a central screw.

3.3. When required, the plenum will be supplied with a damper adjustable through the finished side of the front plate, in order to adjust the volume of air. This damper will be available in two options:

3.3.1 **Radial damper**: Key with circular pivoting blades on a flexible metallic cable which is adjustable through the front plate of the diffuser allowing for air flow adjustment of 0% to 100%.

3.3.2 **Axial damper**: Perforated swiveling flap from 0 to 90 degrees with a blocking system allowing for air flow adjustment of 25% to 100%.

4. Balancing

4.1. Balancing of DAL 358 diffusers must be performed by a professionally certified technician, trained in ventilation system balancing.

4.2. The technician must take into consideration the correction factor for use of a balometer when regulating air volume.

5. Quality required: NAD Klima, model DAL 358

Training

DAL358

- Ceiling diffuser, square or round

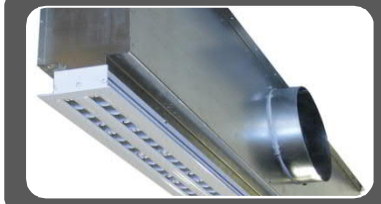

SAL35

- Linear diffuser

RRA

- Duct diffuser with slots

RDD

- Duct diffuser with perforation

SAL35

- Linear diffuser
- Available with one or multiple slots
- Max length : 2 m.
- Continuous effect
- Plenum included

Type of rollers for the diffuser

Installation height up to 14 ft (4,3 m)

Eccentric roller

For installation height
up to 4.3 m (14 ft)

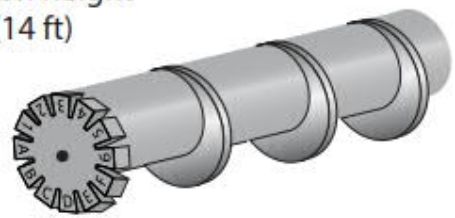

Installation height between
14 ft (4,3 m) to 30 ft (9m)

Roller nozzles

For installation height
4.3 m (14 ft) to 9 m (30 ft)

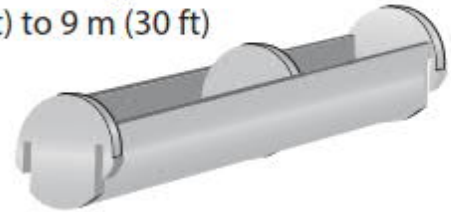

Selection

For installation height
up to 4.3 m (14 ft)

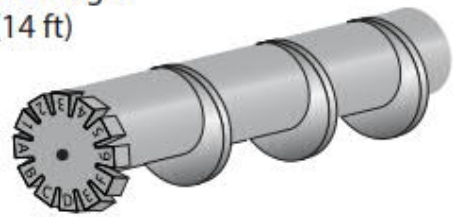

Specifications :
Height of the air duct: H = 3.00 m
Air flow by diffuser : Vo = 384 m³/h
Heating/Cooling mode
length of SAL: L = 1500 mm

Research
1- Air flow by meter of slot section
2- Number of slots n .

Solution :
1- 384 m³/h ÷1.5 = 256 m³/h/m$_f$

2- Number of slots : n = 3

256 m³/ h

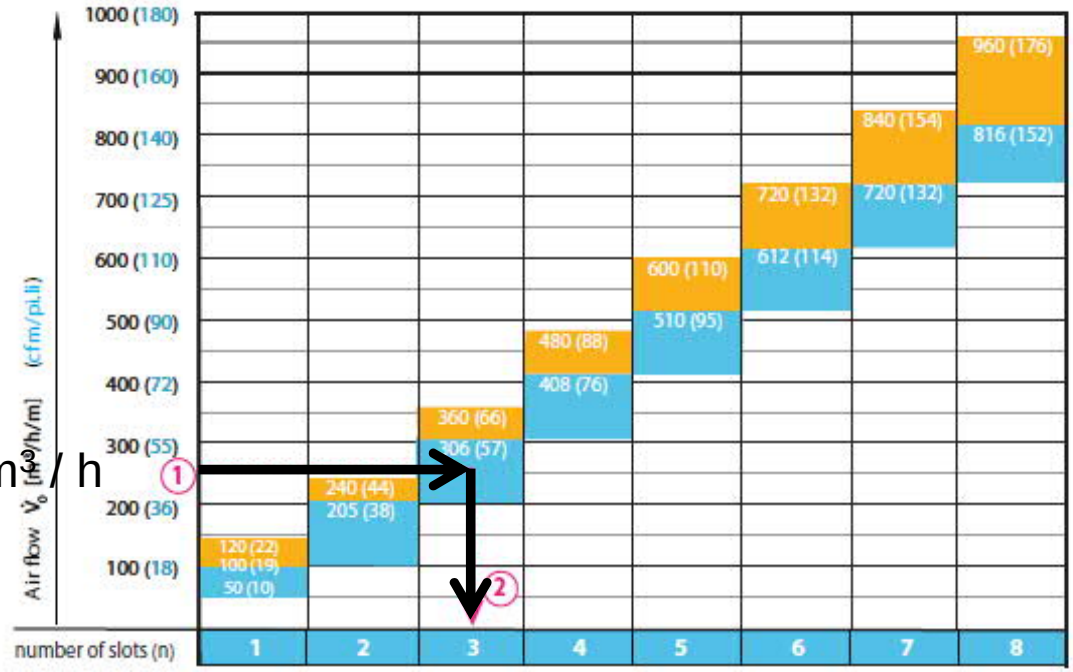

Air Flow by meter of slot of SAL 35 $\dot{V}_o$	m³/h/m / slot (cfm/ li.ft / slot)
Cooling only for all ceiling heights Heating and cooling or cooling only for ceiling heights ≤ 3.0 m	50 - 100 (10-19)
Heating and cooling or heating only for heights of 3,0 m - 4,5 m	100 - 120 (19 - 22)

Selection

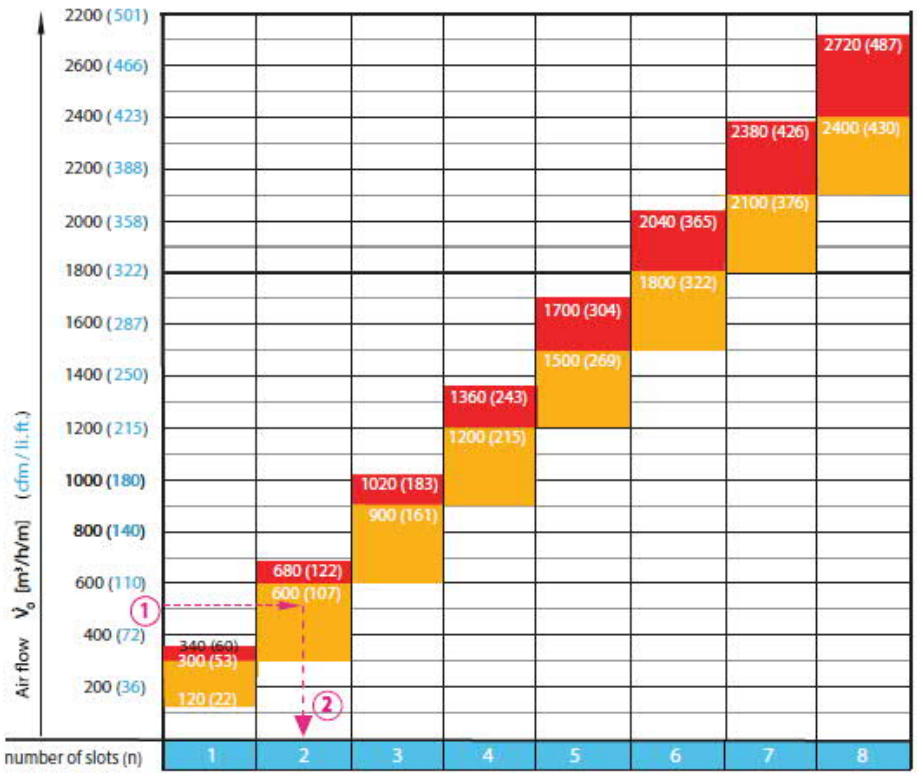

Air Flow by meter of slot of SAL 35 $\dot{V}_0$	m³/h/m / slot (cfm/li.ft. / slot)
Heating and cooling or heating only for heights of 4,5 m - 6,0 m	240 - 300 (43 - 54)
Heating and cooling or heating only for heights of 6,0 m - 7,0 m	300 - 340 (54 - 61)

If heating mode cannot be selected for the initial flow in areas with ceiling heights of 4.5 m, reduce the length of the slots L_S to the recommended length.

For installation height
4.3 m (14 ft) to 9 m (30 ft)

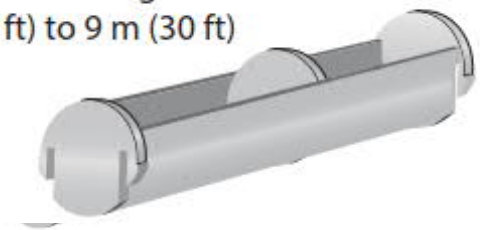

Note :
To facilitate the selection of the SAL, the total airflow must be calculated for active slot lengths of 1m.

Specifications:

Height of the air-duct:	H = 5.00 m
Airflow by diffuser:	$\dot{V}o$ = 770 m³/h
Cooling:	ΔT = - 15°C
Heating:	ΔT = +15°C
Length of SAL:	L = 1500 mm

Research:
1- Airflow by metre of slot section
2- Number of slots n in cooling

Solution:
① Each slot of 1500 mm = 1.5 m of length, which we divide by 1.5 to find the air flow by metre of slot : 770 m³/h / 1.5 = 513 m³/h/m

② The diagram "Number of slots" and in a cooling mode we find the number of slots : n=2.

Air flow directional control

- Maximum installation height of 10 ft (3m).

Video windows adjustment

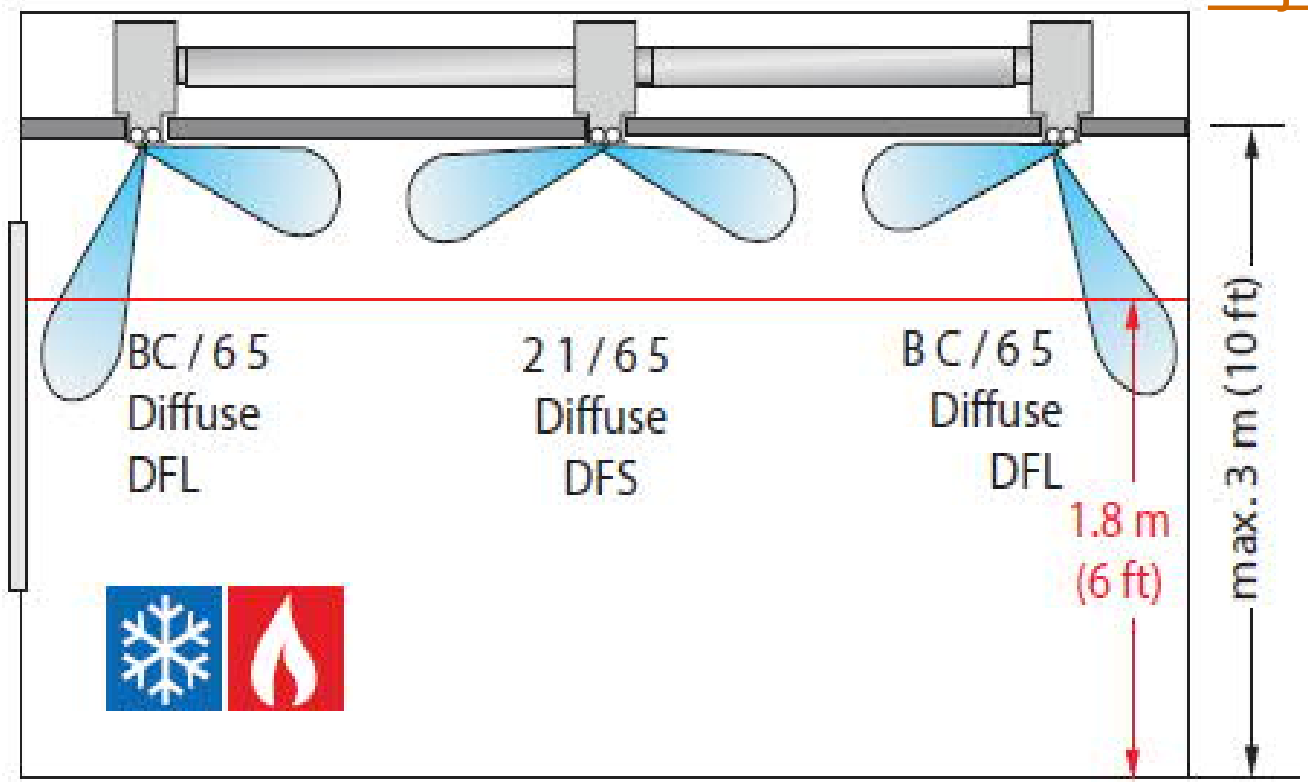

Air flow directional control

- Maximum installation height of 14 ft (4,3 m)

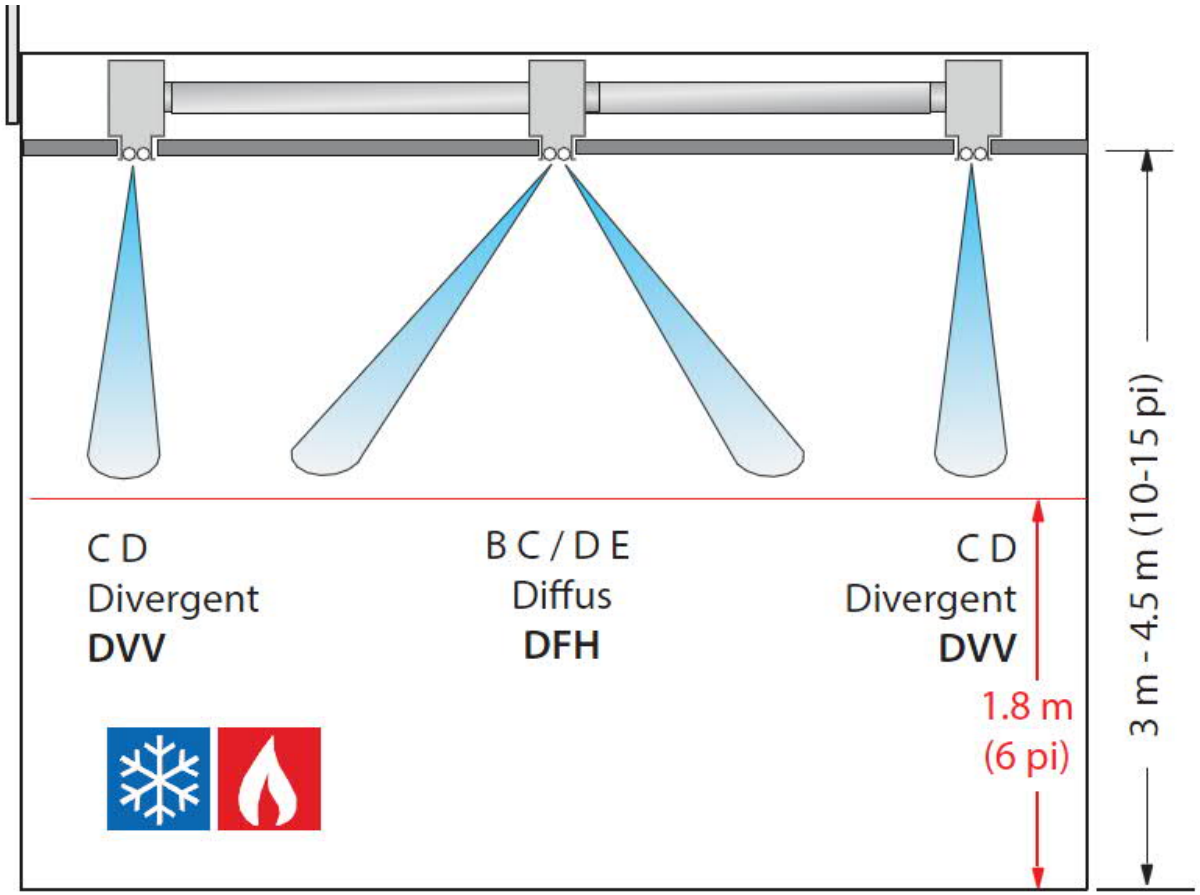

Air flow directional control

- Maximum installation height 30 ft (9.0 m).

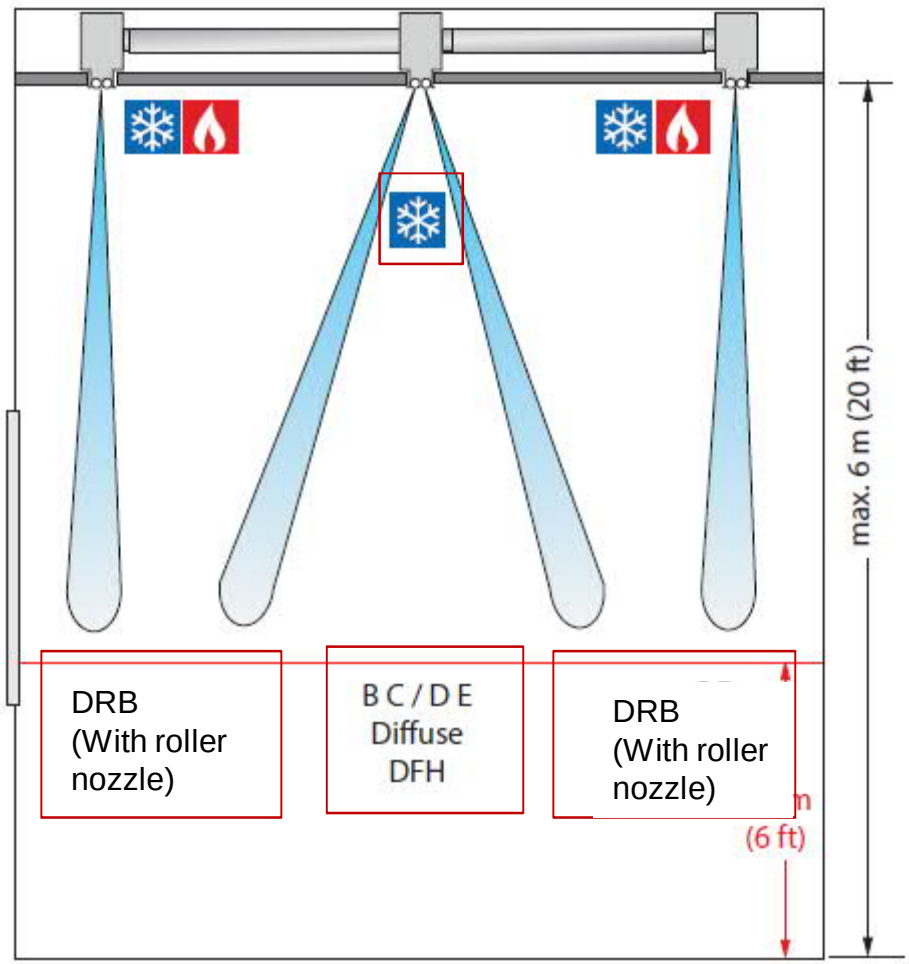

End Cap

Single installation PL2:
With “L” end caps on both sides.

PL with wide profile (”L”)

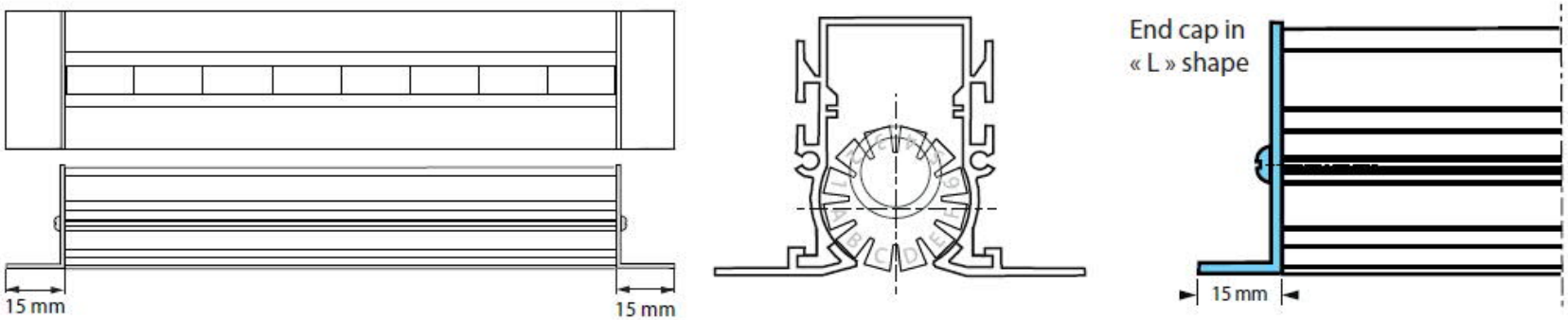

End Caps

Multiple installations

PLL + PLP + PLR: with “L” end caps

Connectors (pins)

The connection between diffusers is made with the aid of pins (included) when needs indicate that more than one diffuser in length is required.

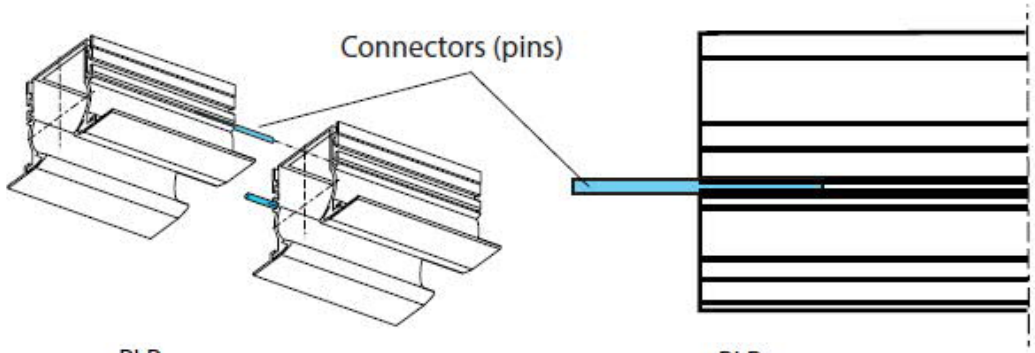

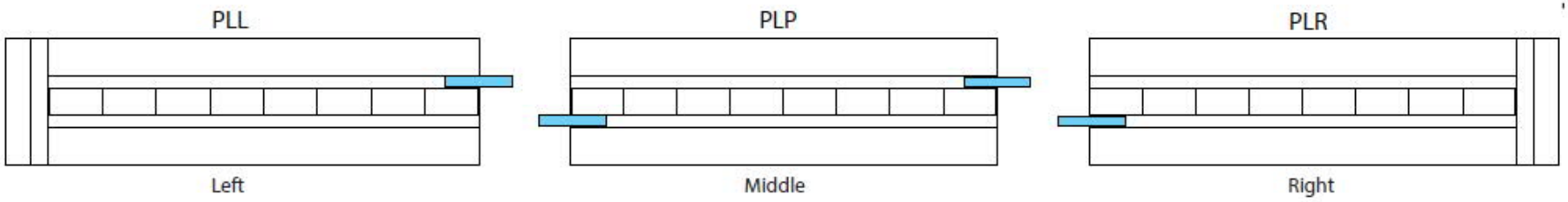

Continuous Look

Simulation Graphic

Nb of slots

Airflow rate per meter of slots

Vertical distance travelled by the air jet before reaching the selected air speed

Horizontal distance travelled by the air jet

X critical

Air jet velocity

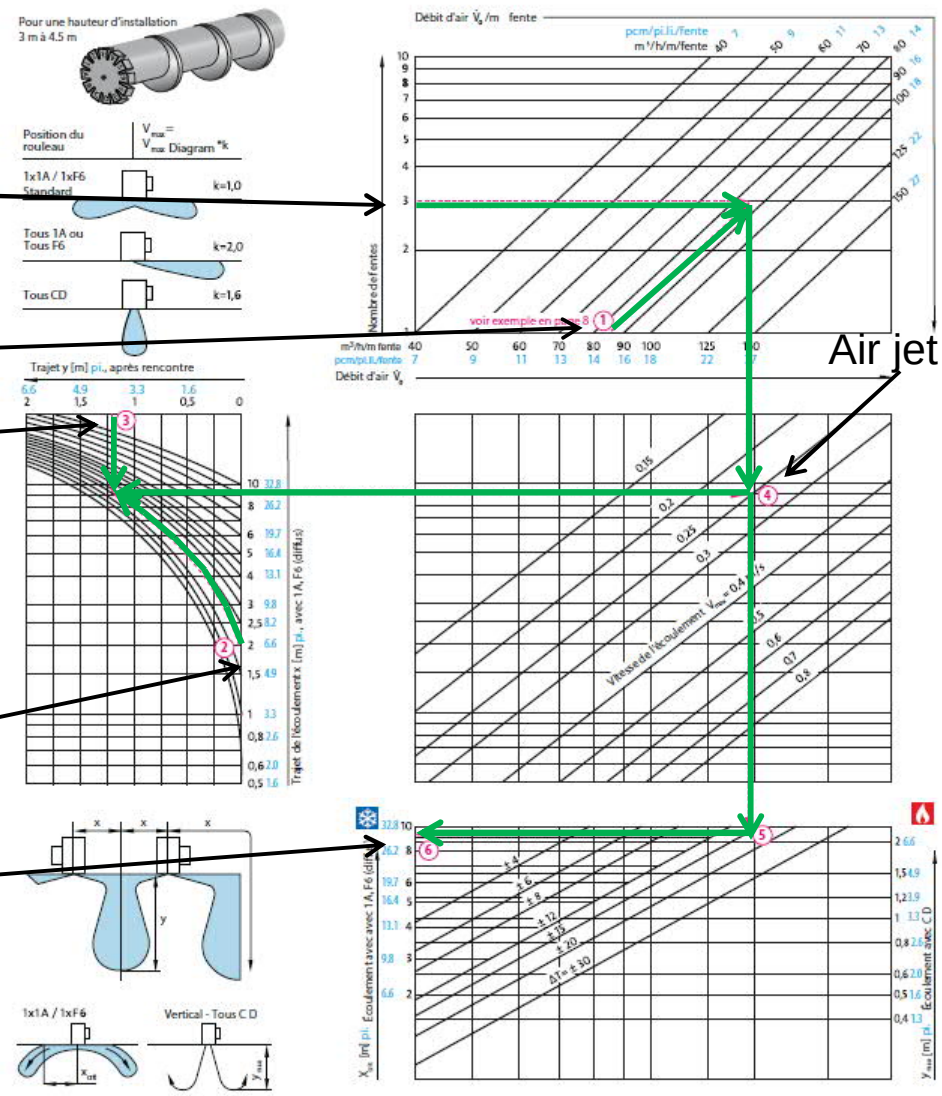

Technical Specs chart

NAD Specifications SAL35

Identification	Manufacturer	Model	comments
L1	NAD Klima	SAL35-2000-3	1 , 2 , 3, 4, 5, 6
L2	NAD Klima	SAL35-1500-3	1 , 2 , 3, 4, 5 ,6
L3	NAD Klima	SAL35-2000-4	1 , 2 , 3, 4, 5, 6

Note:

1 – Plenum with balancing damper must be supplied by the manufacturer.

2 – The color of the diffuser must be selected from the RAL chart , as well the colour of the rollers from our standard colors (withe, black, creme).

3 – Air pattern adjusted and balanced in factory according to plan

4 – The plenum is supplied with an inlet flange on TOP

5- The plenum with a radial damper must be supplied by the manufacturer.

6- The plenum with an inner acoustic insulation will be supplied by the manufacturer

Codification on plans

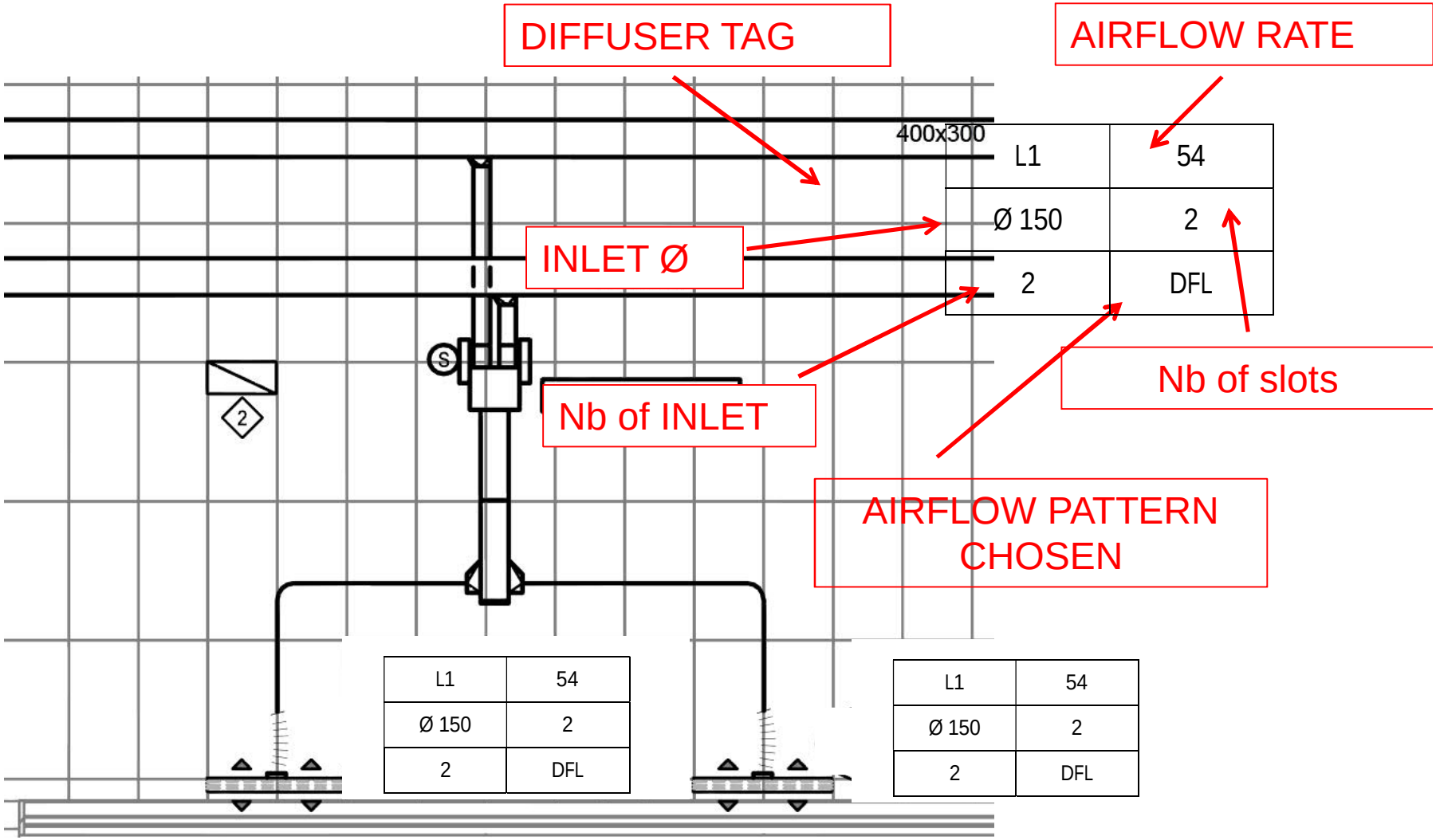

Codification on plans : line of SAL

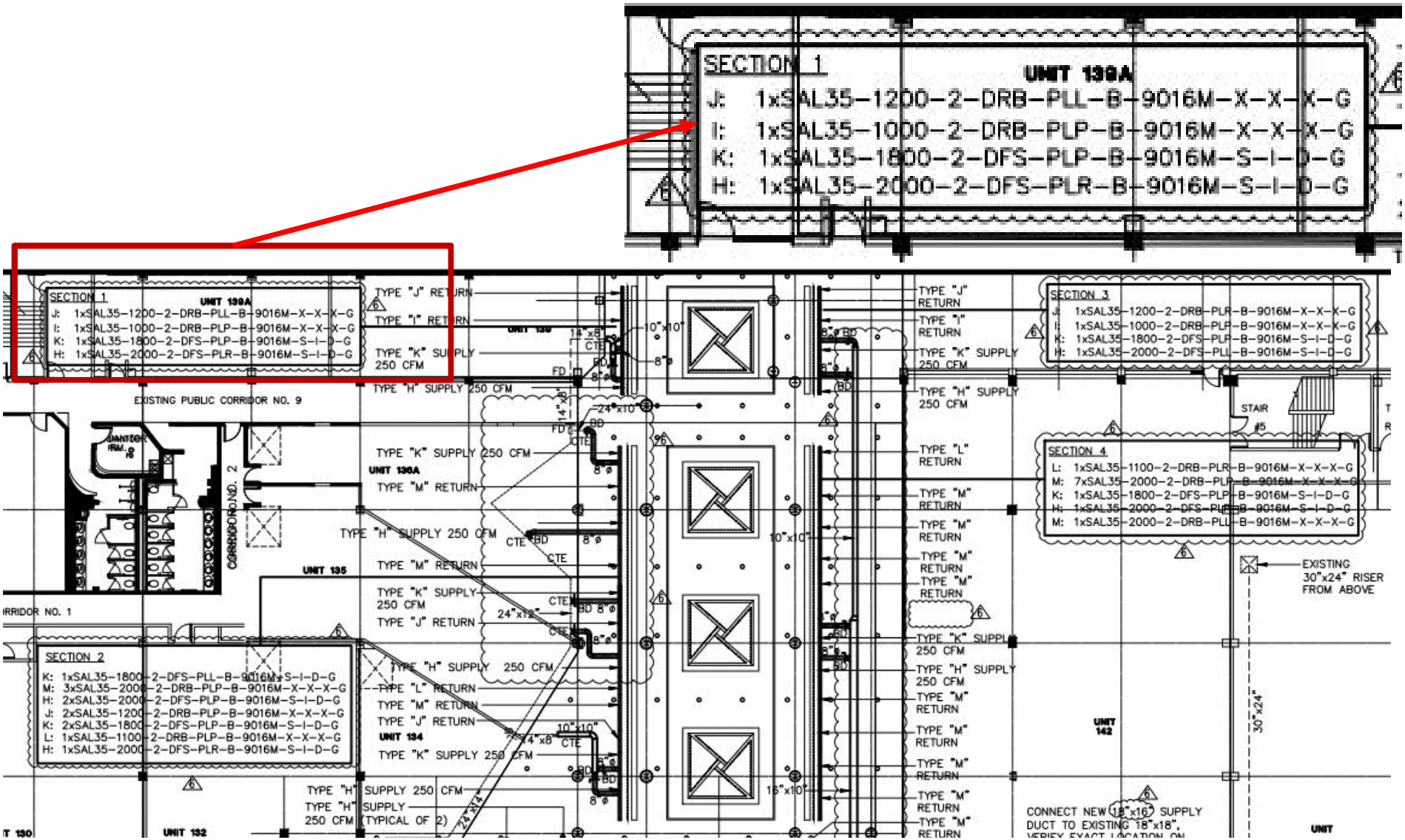

Codification

SAL 35	Product
0300, 0400, 0500, 0600, 0700, 0800, 0900, 1000, 1100, 1200, 1300, 1400, 1500, 1600, 1700, 1800, 1900, 2000	Length of diffuser
1, 2, 3, 4, 5, 6, 7, 8, 9, 10	Number of slots
DFS = Standard diffuse 21 / 65 DFL = Window diffuse B C / 65 DFH = Diffuse height BC / DE DFE = Diffuse window (max. 4 m) BC / EF DFF = Diffuse AB / EF DFN = Diffuse CD / AB DVB = Divergence 21 DVD = Divergence 65 DVM = Wall divergence DE (jet towards the ceiling) DVV = Vertical divergence CD DVS = Divergence 21 - 65 DRB = Divergence with roller nozzles	Airflow
PL2 = Wide profile with end cap in "L" shape on both sides PLL = Wide profile with end cap in "L" shape on left side PLR = Wide profile with end cap in "L" shape on right side PLP = Wide profile without an end cap (with pins) PS2 = Narrow profile with flat end cap on two sides PSL = Narrow profile with flat end cap on left side PSR = Narrow profile with flat end cap on right side PSP = Narrow profile without end cap (with pull pins) APA = With a steel frontal plate * (Write the dimensions you need (in mm) in annotation)	Profile and end cap
W = White rollers or white nozzles (RAL 9003) C = Cream rollers or cream nozzles (RAL 9010) B = Black rollers or black nozzles	Colour of rollers or nozzles
9003 = White 9010 = Cream 00SB = Solar black (Standard matte black) 00SM = Matte silver (Standard metallic gray) _____ = RAL color (indicate the number of the colour)	Diffuser colour
S = Plenum with inlet on the side T = Plenum with inlet on the top X = Without plenum	Plenum
I = With acoustic insulation A = With closed cell acoustic insulation X = Without insulation	Acoustic insulation
F = With fireproof insulation and fireproof dampers X = Without fireproof insulation and fireproof dampers	Fireproof insulation
D = With spring damper R = With radial damper ** X = Without damper	Balancing damper
G = Gypsum ceiling W = Wall X = Suspended ceiling	Type of installation
SAL 35 - 0300 - 1 - DFS - PL2 - B - 9003 - S - X - X - X - X	Example

Notes :
* For the APA model, it is essential to indicate the overall dimensions of the steel plate you need (in mm), in annotation.
** Not available on oval collar

Specification

Available online
In word and excel format
www.nadklima.com

1 - Description and physical characteristics

1.1 The high induction linear diffuser must be made of extruded aluminum profiles.

1.2. The 100 mm long eccentric rollers will have an alphanumeric identification which will permit the adjustment of the air flow pattern over 180 degrees.

The eccentric rollers and roller nozzles meet requirements of the National Building Code, Section 3.1.13.2, and certified according to the standard ASTME 162 "Surface Flammability of Materials Using a Radiant Heat Energy Source".
Eccentric rollers are available in black, cream or white.

1.3. The diffuser must be adapte to fit regular North American suspended ceilings, classic gypsum ceilings or wall installation.

1.4. The diffuser may be supplied with a wide or narrow profile.

1.5. The diffuser will be powder coated with a polyester TGIC-free paint, providing a smooth, easy-to-clean, chip and fade resistant finish. The architect or client may choose a standard colour from the RAL colour chart.

2 - Performance

2.1. The diffusers' performance must be confirmed by simulation software for the critical area. This software indicates the pressure drop, acoustic power it generates as well as showing a cross-sectional view illustrating the critical airflow path in cooling, isothermal and heating modes.

2.2. **Parameters of guaranteed comfort**

2.2.1 The performance statistics of the diffuser should reflect a maximum air speed of 0.15 m/s (30 ft/m) in occupied zone at 1.3m (4 ft) from the floor. The performance guarantee shall be demonstrated with performance curves showing the path of the air stream.

2.2.2 The diffuser must ensure a maximum variant in temperature difference of -1°C between the air jet and the area occupied in 4 ft (1.3 m) from the floor. To achieve this, the ratio of temperature differential must perform at minimum of $\Delta T_{xy} / \Delta T_0 \leq 0.1$ (for an initial differential at $\Delta T_0 = -10°C$).

2.2.3. In cooling, the diffuser must guarantee in variable volume (VAV) a critical distance (X_{crit}) of at least that which is indicated in the following table :

Diffuser inlet in.	Air flow maximum cfm	Air flow minimum cfm	X critic ft. (m)
6	80 - 150	20 - 40	1'-7" (0,5)
8	151 - 280	41 - 90	1'-11" (0,6)
10	281 - 400	91 - 140	2'-3" (0,7)
12	401 - 600	141 - 200	2'-7" (0,8)

3 - Plenum

3.1 The diffuser includes a plenum provided by the manufacturer. The plenum is made from 24 gauge galvanised steel and comprises suspension points at the four corners. The inlet collar can be centred on the side and adapted to the air flow. The interior joints of the plenum joints will be assembled by clinching and sealed with silicon.

3.2 When required, the plenum will be supplied with a damper adjustable through the finished side of the front plate, in order to adjust the volume of air. This damper will be available in two options:

3.2.1 **Radial damper**: Key with circular pivoting blades on a flexible metallic cable which is adjustable through the front plate of the diffuser allowing for air flow adjustment of 0% to 100%.

3.2.2 **Spring key:** Pivotally perforated plate at the inlet adjustable with a spring mechanism through the front of the diffuser.

4 - Balancing

4.1 The balancing must be executed by a ventilation balancing technician with a recognised professional certification.

4.2 The technician must take into account the factor of correction for the volume of air using a balometer (factor FCB).

5 - Required quality : NAD Klima SAL 35 model.

Training

DAL358

- Ceiling diffuser, square or round

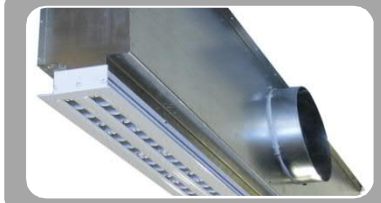

SAL35

- Linear diffuser

RRA

- Duct diffuser with slots

RDD

- Duct diffuser with perforation

RRA Selection

- Slotted duct diffuser
- Ideal for open ceilings
- Maximum installation height.

Eccentric rollers

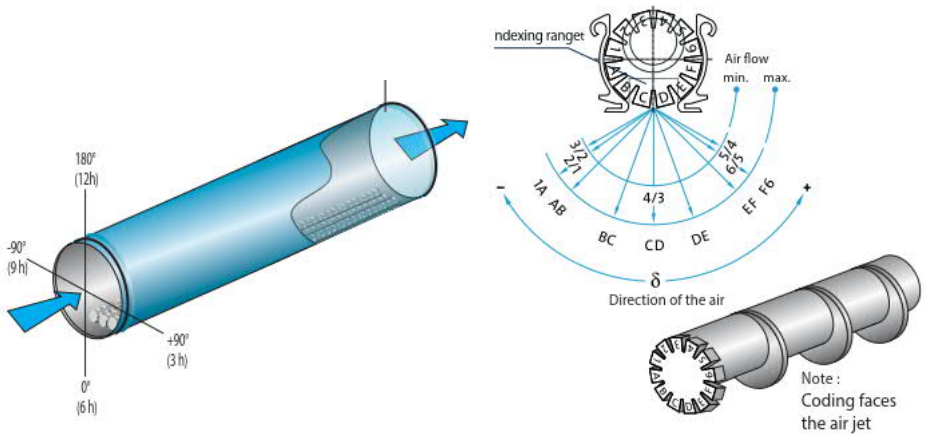

Maximum installation
14 ft (4,3 m)

Nozzle rollers

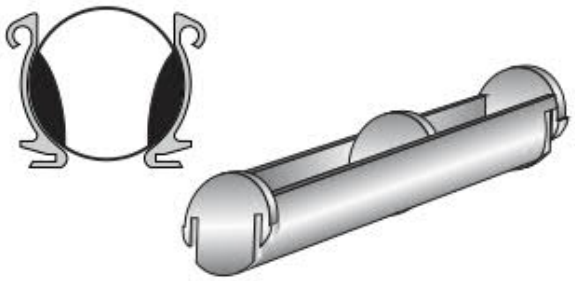

Installation height between
14 ft (4,3m)
and 30 ft (9 m)

RRA Suspension

The suspension of the RRA diffuser is assured by threaded rods (3/8") provided by the installer.
Upon request, colored rod covers choices by the architect, are supplied to cover the threaded rods.

Other methods of suspension are available, the aluminum suspension rail which greatly improves installation, or suspension by a high tension metallic cable.

An adjustable wall support is also provided for a lateral anchor installation.

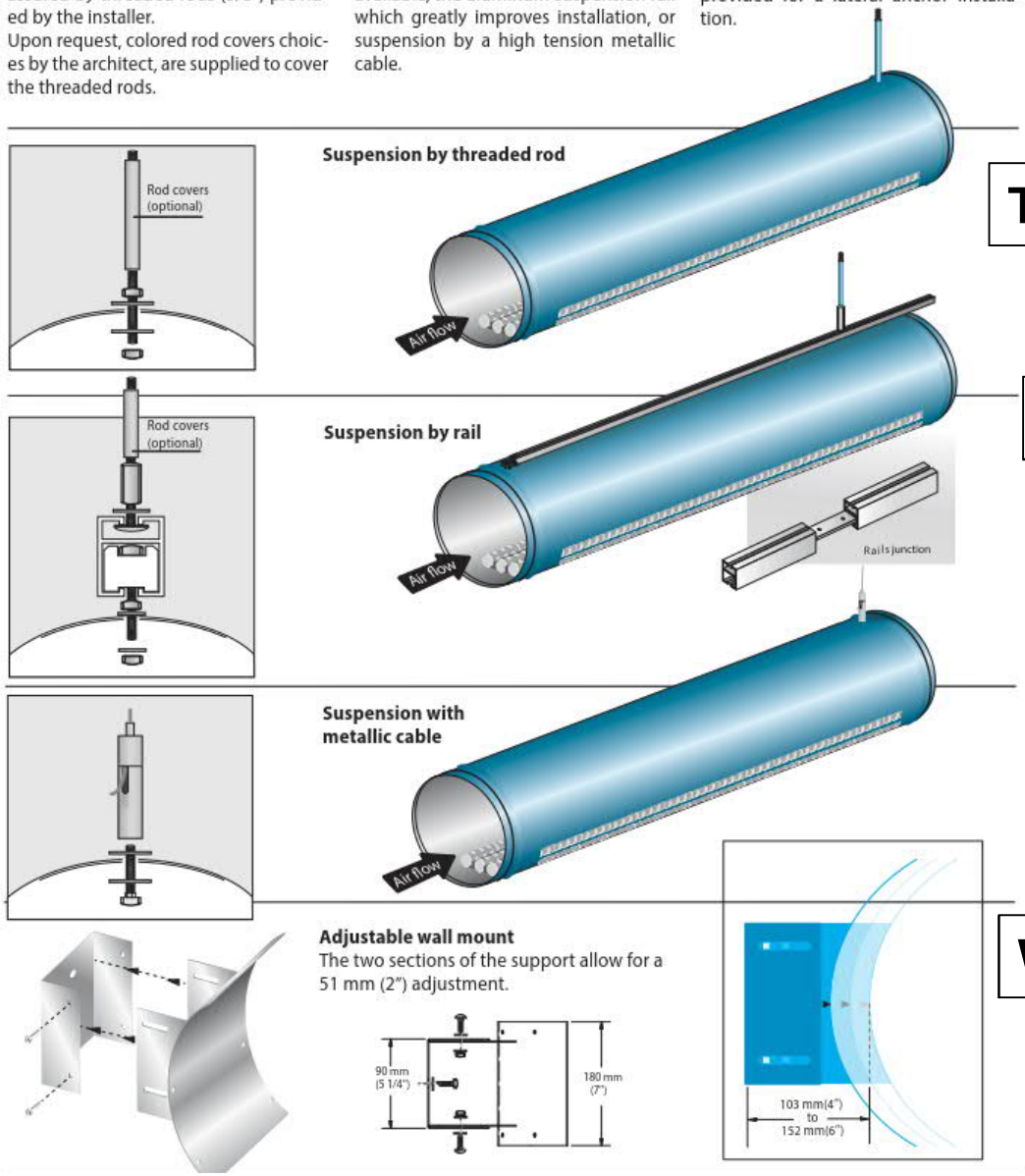

Threaded rods

Rail

Cables

Wall mount

Same type of suspension for other duct diffusers (RDD)

Blends with structure

Selection steps

1. Determine placement of ducts
2. Reducer or damper
3. Determine the Ø
4. Determine airflow per meter of slots
5. Determine the number of slots

Sample Calculation

Zone 1 : 4160 m^3/h (2450 cfm)
Zone 2 : 1232 m^3/h (725 cfm)
Height of underside of duct : 4 m

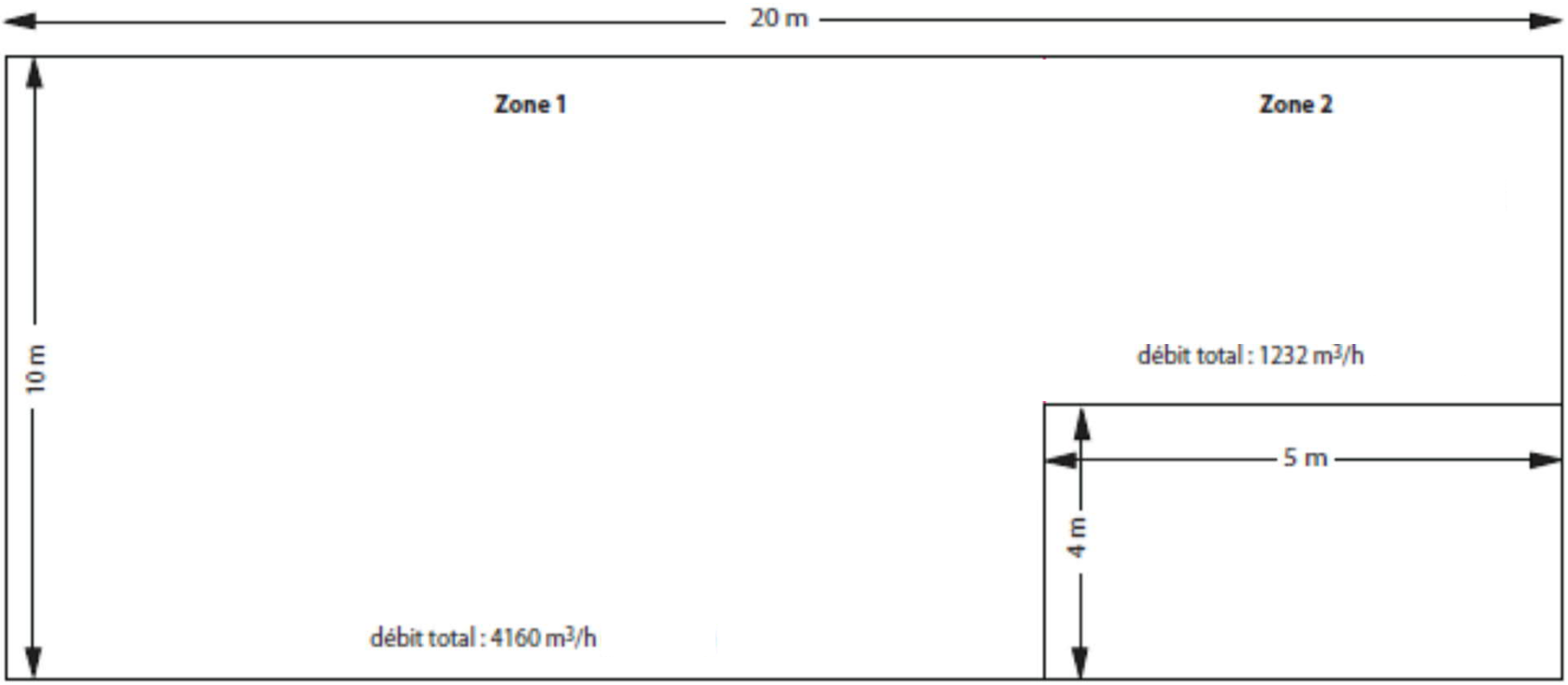

Example of layout

1. **Create a layout of the ducts**
2. Reducer or damper
3. Determine the Ø
4. Determine the airflow
5. Determine the number of slots

Maximum installation space

Air flow by meter of slot of RRA $\dot{V}_o$	Installation height of of the RRA H	Recommended sspace between RRA X MAXIMUM
m³/h/m (cfm/li. ft)	m (ft)	m (ft)
50 - 120 (9 - 22)	≤ 3 (10)	5 (16)
120 - 150 (22 - 27)	3 - 4.5 (10 - 15)	7 (22)
150 - 170 (27 - 31)	4.5 - 7 (15 - 23)	8 (26)

Cooling only: keep the maximum distance X depending on the height, but keep the airflow by meter of the slot at 50 – 120m³/h/m.

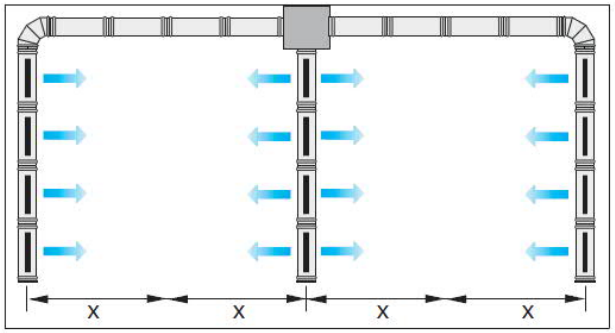

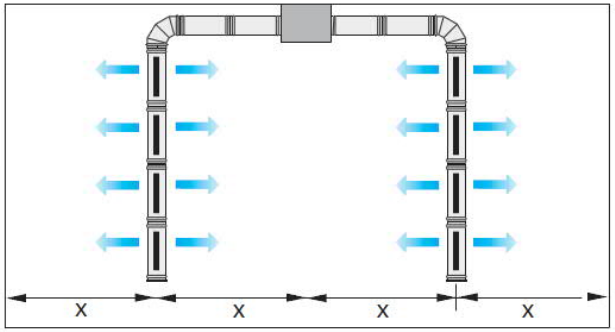

Recommendations for direct connection

1. **Create a layout of the ducts**
2. Reducer or damper
3. Determine the Ø
4. Determine the airflow
5. Determine the number of slots

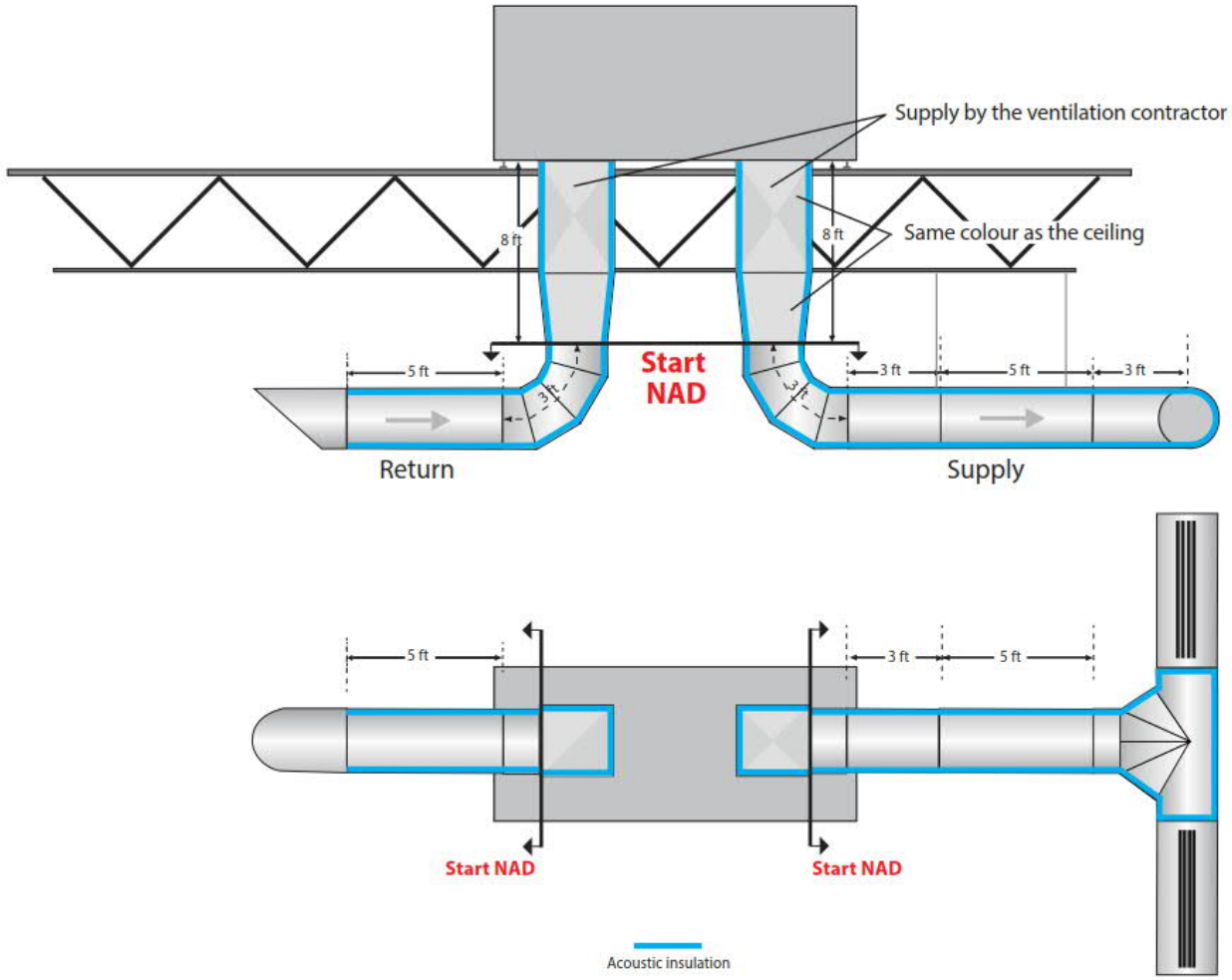

Recommendations for direct connection

1. **Create a layout of the ducts**
2. Reducer or damper
3. Determine the Ø
4. Determine the airflow
5. Determine the number of slots

1. **Create a layout of the ducts**
2. Reducer or damper
3. Determine the Ø
4. Determine the airflow
5. Determine the number of slots

Recommendation for the connection between NAD and spiral duct

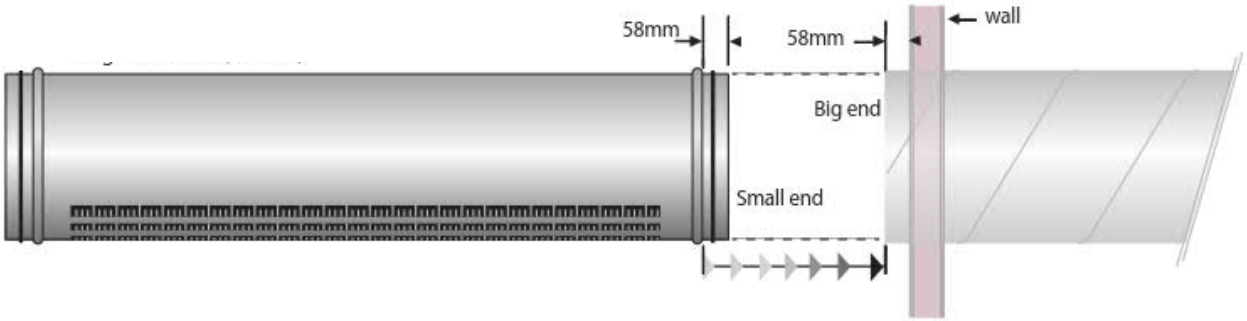

The supply duct exceed the wall an exact length of 2''1/4 (58 mm)

Optimal layout

1. **Create a layout of the ducts**
2. Reducer or damper
3. Determine the Ø
4. Determine the airflow
5. Determine the number of slots

Maximum installation space

Air flow by meter of slot of RRA $\dot{V}_o$	Installation height of of the RRA H	Recommended sspace between RRA X MAXIMUM
m³/h/m (cfm/li. ft)	m (ft)	m (ft)
50 - 120 (9 - 22)	≤ 3 (10)	5 (16)
120 - 150 (22 - 27)	3 - 4.5 (10 - 15)	7 (22)
150 - 170 (27 - 31)	4.5 - 7 (15 - 23)	8 (26)

Cooling only: keep the maximum distance X depending on the height, but keep the airflow by meter of the slot at 50 – 120m³/h/m.

The RRA covers entirely the zone

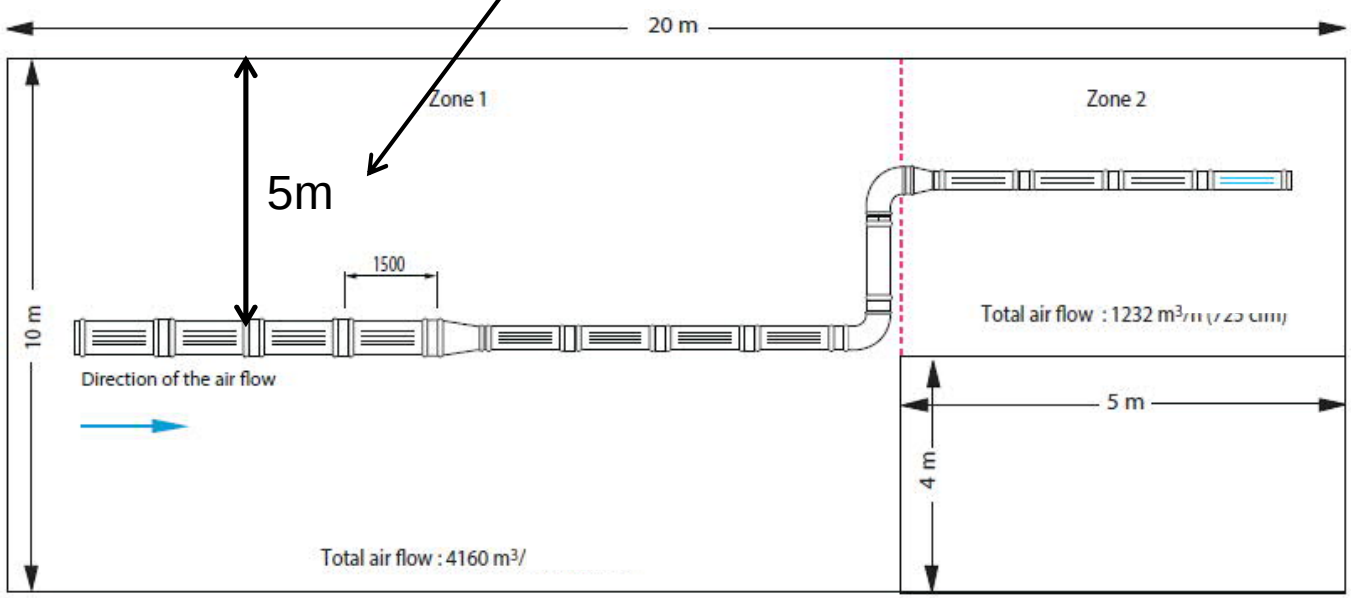

RRA rules

1. **Create a layout of the ducts**
2. Reducer or damper
3. Determine the Ø
4. Determine the airflow
5. Determine the number of slots

Register on last section

Reducer or damper every 25 ft : every 5 active sections

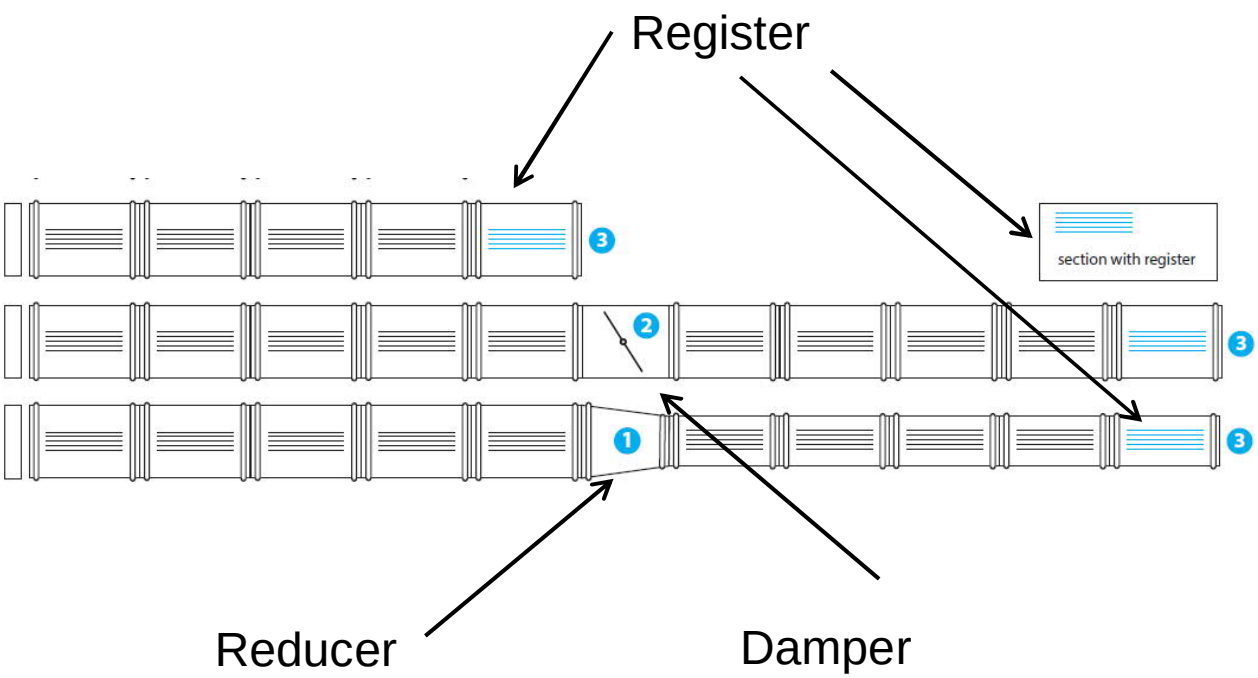

1. **Create a layout of the ducts**
2. Reducer or damper
3. Determine the Ø
4. Determine the airflow
5. Determine the number of slots

Diameter selection

- Select diameter of duct
- ***For airflow of less than 1400 cfm,*** *use the following chart*

Flow range	Ø recommended
below 280 cfm	200 mm (8 in.)
281cfm to 460 cfm	251 mm (10 in.)
461cfm to 650 cfm	303 mm (12 in.)
651 cfm to 1100 cfm	353 mm (14 in.)
1101 cfm to 1400 cfm	403 mm (16 in.)

- ***For airflow greater than 1400 cfm :*** Select the diameter of the duct to obtain a maximum airspeed of 1000 cfm:

Use the « ductulator » or the formula $V = {}^{Q}/_{A}$

V : air speed (fpm)
Q : air flow range (cfm)
A : surface area of duct (ft^2)

1. **Create a layout of the ducts**
2. Reducer or damper
3. Determine the Ø
4. Determine the airflow
5. Determine the number of slots

Selection of Diameter

Zone 1 : composed of 2 sections
section n° 1 :
- 4 x Ø 556 mm
section n° 2 :
- 4 x Ø 403 mm
Zone 2 : composed of 1 section
- 4 x Ø 353 mm

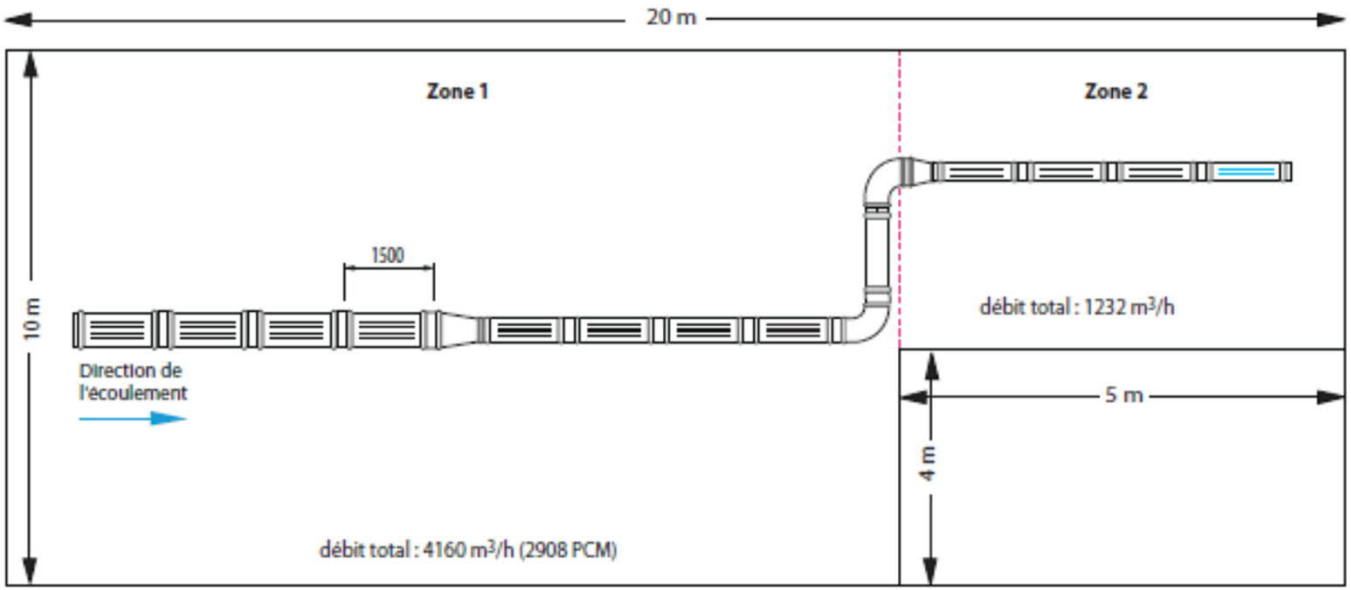

1. **Create a layout of the ducts**
2. Reducer or damper
3. Determine the Ø
4. Determine the air flow per meter of slots
5. Determine the number of slots

Zone 1

$$4160\ \frac{m^3}{h}\ (2450\ cfm)\ for\ 8\ active\ ducts.\ so\ 520\frac{m^3}{h}\ (306\ cfm) per\ duct$$

Zone 2

$$1232\ \frac{m^3}{h}\ (725\ cfm)\ for\ 8\ active\ ducts.\ So\ 308\frac{m^3}{h}\ (181\ cfm) per\ duct$$

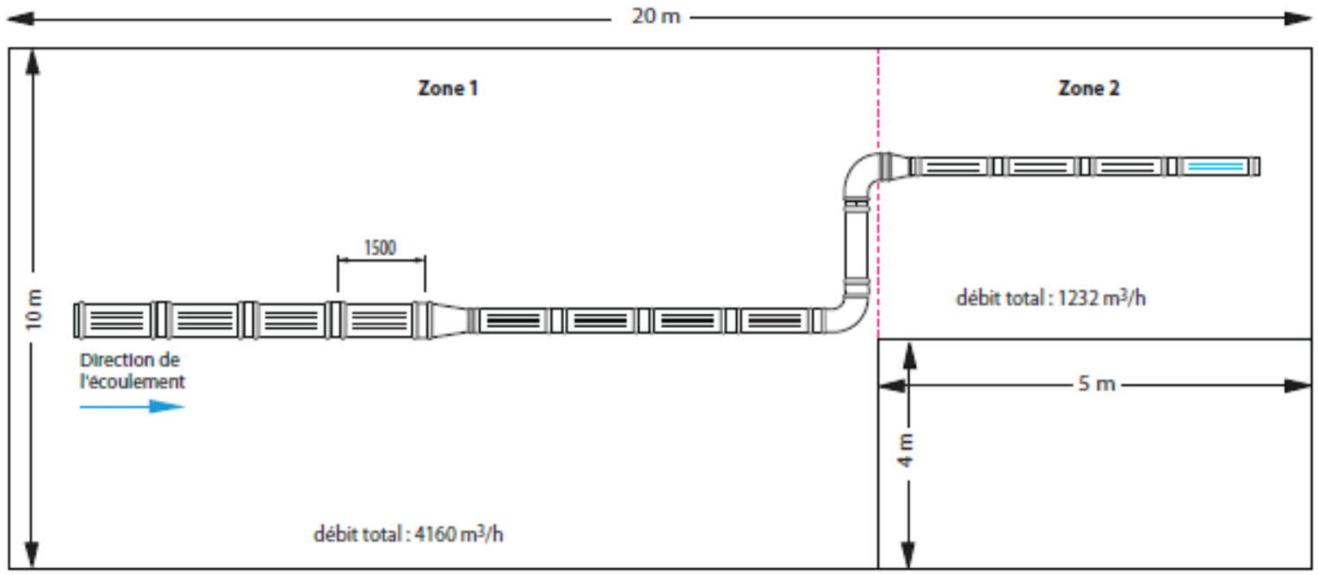

1. **Create a layout of the ducts**
2. Reducer or damper
3. Determine the Ø
4. Determine the airflow per meter of slots
5. Determine the number of slots

An active duct typically has 1300 mm long slots

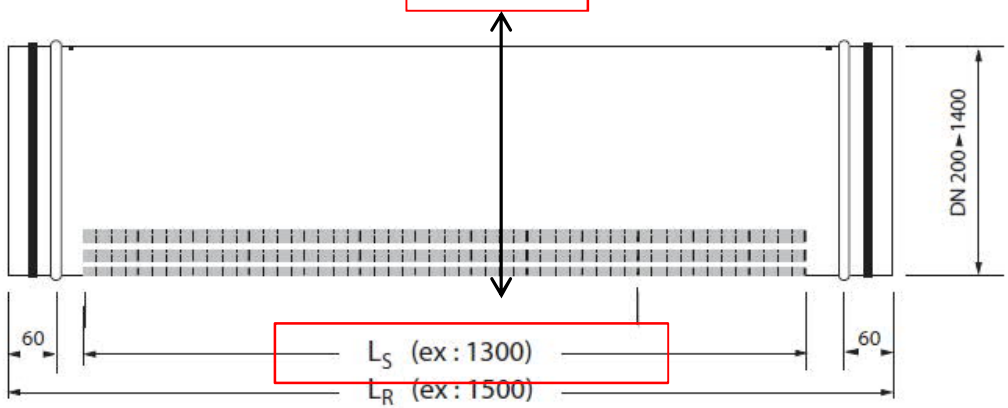

Zone 1

$$\frac{520\,\frac{m^3}{h}}{1.3\,m\ de\ fente} = 400\ {}^{m^3}/_{h}/_{m\ of\ slots}$$

Zone 2

$$\frac{308\,\frac{m^3}{h}}{1.3\,m\ de\ fente} = 237\ {}^{m^3}/_{h}/_{m\ of\ slots}$$

1. **Create a layout of the ducts**
2. Reducer or damper
3. Determine the Ø
4. Determine the air flow per meter of slots
5. Determine the number of slots

Zone 1

$$\frac{520\,\frac{m^3}{h}}{1.3\ m\ of\ slots} = 400\ {}^{m^3}/_{h}/_{m\ of\ slots}$$

Zone 2

$$\frac{308\,\frac{m^3}{h}}{1.3\ m\ of\ slots} = 237\ {}^{m^3}/_{h}/_{m\ of\ slots}$$

Sélection du nombre de fentes à rouleaux excentrés

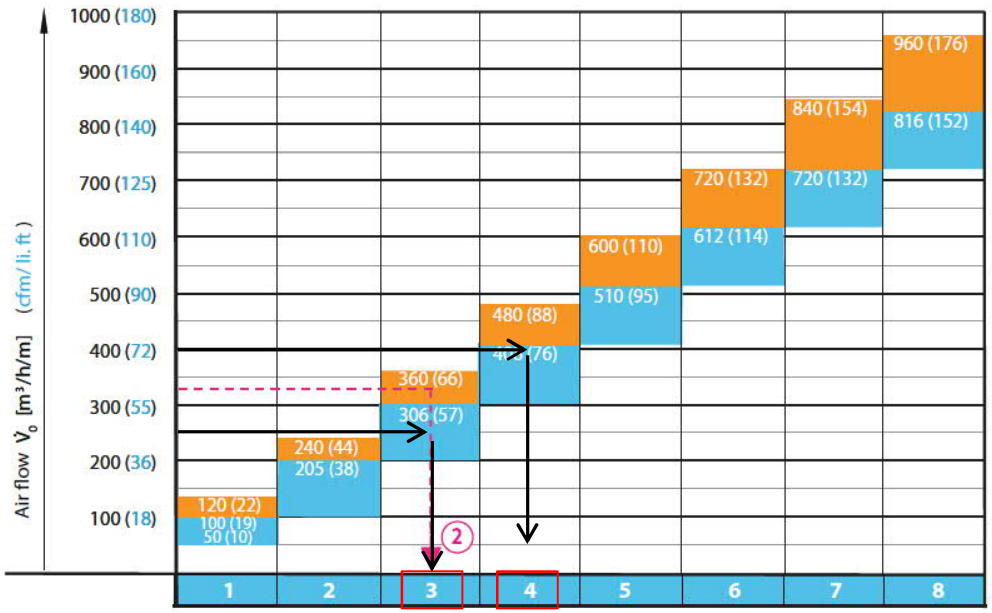

Air Flow by meter of slot of RRA $\dot{V}_0$	m³/h/m/slot (cfm/li.ft/slot)
Cooling only for all heights. Heating and cooling or cooling only for heights ≤ 3.0m (9.8 ft)	50 - 120 (10-22)
Heating and cooling or heating only for heights of 3.0m – 4.5m * (9.8 ft - 14.8)	120 - 150 (22 - 27)

-If the heating mode to the heights above 3,0 m can be selected to an initial rate, reduce the length L_S of the slot in accordance with the air flow per meter of recommended slot.

Codification of RRA on plans

TAG DIFFUSER

Airflow

RRA-A	101 l/s
2	DFR

Start of NAD section

Nb of slots

Air pattern

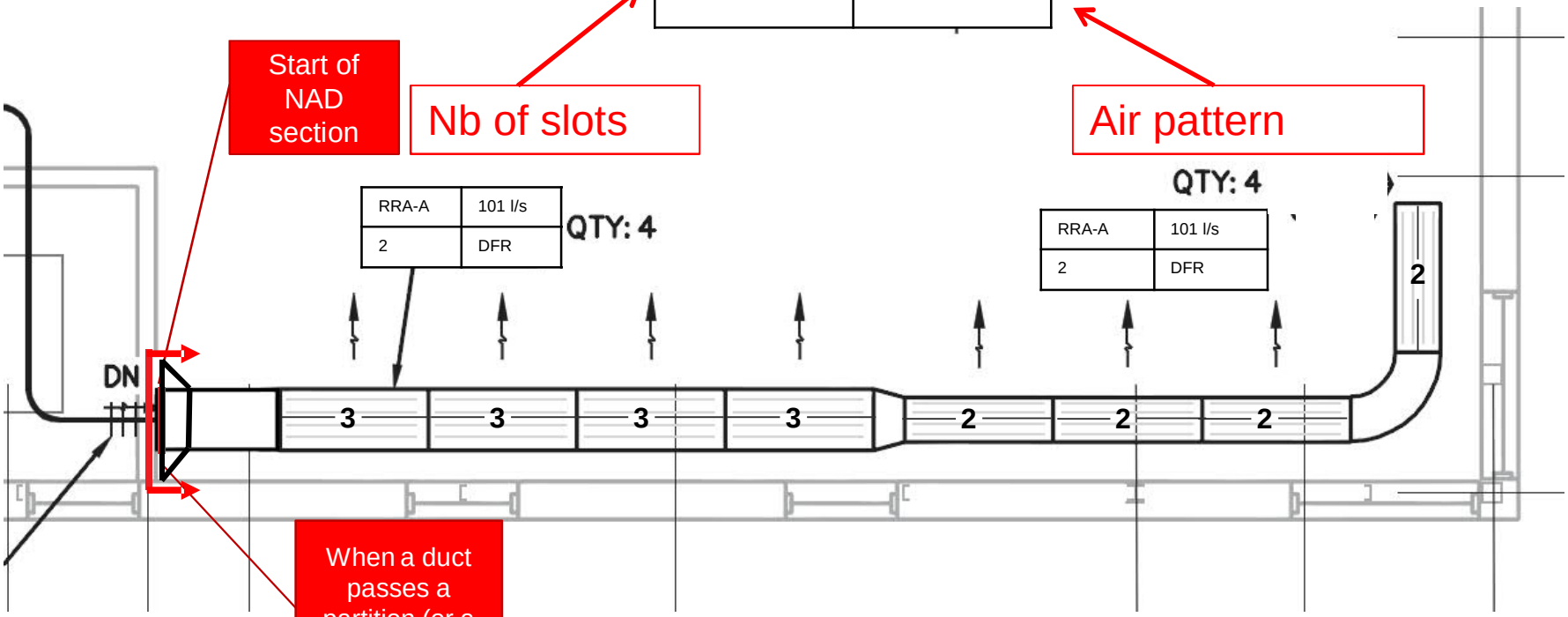

When a duct passes a partition (or a wall), don't forget to use a collar

Example of collar

NAD Technical Spec Chart

Tableau NAD Specifications RRA

Identification	Brand	Model	Airflow	Ceiling height	Height below the duct	Room Temp in winter	Room R.H. % in winter	Temp. in duct in winter	Room Temp In summer	Room R.H. % In summer	Tempin duct in summer	Notes
RRA-A	NAD Klima	RRA										1, 2, 3,4,5,6,7
RRA-B	NAD Klima	RRA										1, 2, 3,4,5,6,7
RRA-C	NAD Klima	RRA										1, 2, 3,4,5,6, 7
RRA-D	NAD Klima	RRA										1, 2, 3,4,5, 6,7

Note :

1 – 3/8 threated rod will be supplied by contractor.

2 – The color of the diffuser must be selected from the RAL chart , as well the colour of the rollers from our standard colors (withe, black, creme).

3 – Air pattern adjusted and balanced in factory according to plan

4- The aluminium suspension rails will be painted the RAL color chosen and supplied by the manufacturer.

5- The rod covers will be painted the RAL color chosen and supplied by the manufactuer.

6- The ducts will be acoustically insolated by the manufacturer.

7- Starter flange included

Simulation graphics

Number of slots

Airflow rate per of slots

Vertical distance travelled by the air jet before reaching the selected air speed

Horizontal distance travelled by the air jet

Vertical penetration of air jet

Air jet velocity

Temperature differential in cooling

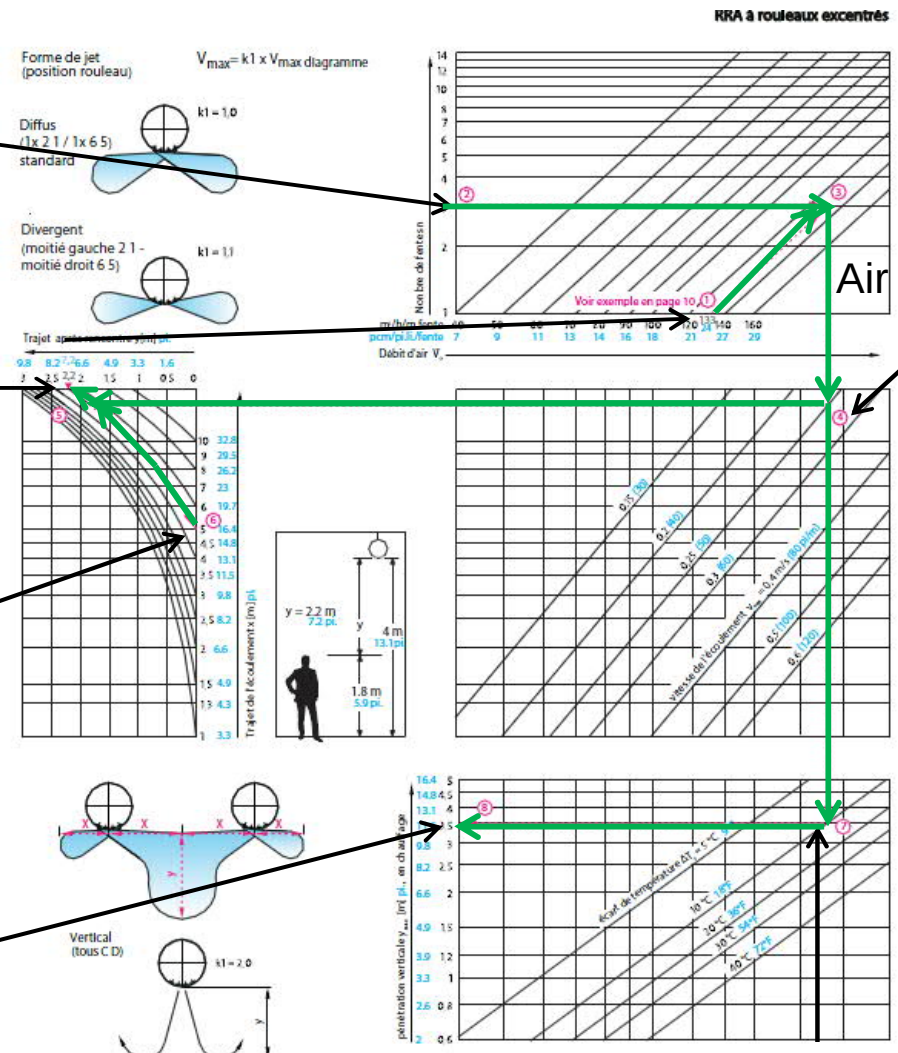

Codification

Codification for RRA

RRA	Product
1000, 1500, 1800	Lenght of duct L_R
0800, 1300, 1600 ____ = Special lenght, write the lenght in mm XXXX = Non applicable (passive duct)	Lenght of slots L_S
200, 251, 302, 353, 403, 454, 505, 556, 607, 657, 708, 759, 810, 861, 911, 962, 1013, 1064, 1115, 1165, 1216, 1267, 1318, 1369, 1419	Ø Duct diameter
X = Passive 1, 2, 3, 4, 5, 6, 7, 8, 9, 10, 11, 12, 13, 14, 15,	Quantity of slots
XXX = Passive duct 006 = Slots at 0° (6h) 003 = Slots at +90°(3h) 009 = Slots at -90° (9h) 012 = Slots at 180° (12h) 039 = Slots at +90° (3h) and at -90° (9h) 639 = Slots at 0° (6h), +90° (3h) and at -90° (9h) 612 = Slots at 0° (6h) and at 180° (12h) AAA = Other (specify in annotation)	Slots position
XXX = Passive DFS = Diffuse standard 21/ 65 DFR = Diffuse window DE / 21 DFL = Diffuse window BC / 65 DFF = Diffuse height AB / EF DFT = Diffuse CD / EF-slots at 3 o'clock DFN = Diffuse CD / AB - slots at 9 o'clock DFH = Diffuse height BC / DE DFA = Diffuse AB / DE DVS = Diverging 21 / 65 DVV = Diverging vertical CD DRB = Diverging with roller nozzle	Air flow
W = White roller or white roller nozzle (RAL 9003) C = Cream roller or cream roller nozzle (RAL 9010) B = Black roller or black roller nozzle X = Without roller	Rollers and roller nozzles Color
9003 = White 9010 = Cream 005B = Solar black (Standard matte black) 005B = Silver mat (Stamdard metallic grey) ____ = RAL color* (write the color number of RAL)	Diffuser color
A = With closed-cell acoustic insulation X = Without insulation	Acoustic insulation
D = With damper X = Without damper	Balancing damper
R = With register (perforated plate) X = Without register	Register
RRA - 1500 - 1300 - 200 - 1 - 006 - DFS - W - 9003 - X - X Annotation	Example

Codification for reducers

RRA RED = Reducer	Product
254, 305, 356, 406, 457, 508, 559, 610, 660, 711, 762, 813, 864, 914, 965, 1016, 1067, 1118, 1168, 1219, 1270, 1321, 1372, 1422	Ø D - Inlet diameter
203, 254, 305, 356, 406, 457, 508, 559, 610, 660, 711, 762, 813, 864, 914, 965, 1016, 1067, 1118, 1168, 1219, 1270, 1321, 1372	Ø d - Outlet diameter
T = Flat on Top (standard) C = Center B = Flat on Bottom	Configuration
S = Standard α = 14° A = Other (specify in annotation)	Length
9003 = White, 9010 (Cream), 005B = Solar black (Standard matte black) 005B = Silver mat (Stamdard metallic grey) ____ = RAL color * (write the color number of RAL)	Color
A = With closed-cel acoustic insulation X = Without insulation	Acoustic insulation
RRA - RED - 305 - 203 - T - S - 9003 - X Annotation	Example

Blue: Standard

Specifications

Available online
In word and excel format
www.nadklima.com

1. Description and physical characteristics

1.1 The high induction duct diffuser will be made of 22 ga brushed steel for duct inferior to 508 mm in diameter, and 20 ga for diameter superior or equal to 508mm.

1.2 The circular duct diffuser will be available in diameter ranging from 203 mm to 1419 mm. The duct diffuser will be equiped at each end with a groove with a gasket made of EPDM to insure a tight seal between sections. The sections will be assembled using union sleeves.

1.3 Steel reininforcements will be have to be installed inside ducts of more than 433 mm (17 inches) in diameter in order to maintain it's shape.

1.4 The duct diffuser will be painted with a TGIC free polyester powder coat. It will have a smooth surface for easy cleaning. The colour will be chosen by the architect or the customer. The paint of the diffuser must be guaranteed against peeling for a minimum period of 5 years.

1.5 The conduit diffuser will be supplied with slots containing ABS (black, creme or white) eccentric rollers and / or nozzle rollers. The 100 mm long eccentric rollers will be alphanumerically identified allowing for the adjustment of the air flow pattern over 180 degrees.
The eccentric and nozzle rollers will respect the National Building Code, article 3.1.13.2, and will be certified according to norm ASTME 162 « Surface flammability of materials using a radiant heat energy source».

1.6 A reducer fitting or perforated balancing damper with a self locking mechanism allowing for an output between 10% and 100%, must be installed after a maximum of 5 consecutive active sections of the same diameter. A Slot register will be integrated to the last active section of the system.

1.7 The union sleeves will not exceed the dimensions of the duct by 3 mm, and will be rounded to facilitate cleaning.
The duct will have as smooth as possible surface to maintain an architectural appearence.

1.8 The duct diffuser can be passive, without slots.

2. Installation and suspension

2.1 The suspension of the duct will be done with threaded rods (3/8") supplied by the installer.

2.2 The threaded rods can be covered with rod covers supplied by the manufacturer of the diffuser. The colour of the rod covers according to the RAL colour chart will be chosen by the architect or the customer.

2.3 When required, the suspension of the duct diffuser will be available in three options.

2.3.1 **Rail suspension**
The duct diffuser could be slid into an aluminium rail suspended, offering a solution for varied types of ceiling. The rail can be painted according to the RAL colour chart and chosen by architect or customer.

2.3.2 **Suspension by metallic cable**
The duct diffuser can be suspended by metallic cable (aviation style) 7 X 7 or 7 X 9 of galvanised or stainless steel (304 or 316) of medium or high traction resistance.

2.3.3 **Wall suspension**
The duct diffuser can be anchored laterally with an adjustable wall support in the same colour as the duct diffuser. This wall support will be supplied by the manufacturer of the diffuser.

2.4 When the duct diffuser goes through a wall, a collar adapted to the duct diffuser shall be supplied by the manufacturer.

2.5 The standard accessories shall have the same finish as the duct diffuser (elbows, sleeves, reducers, branches, etc.)

2.6 Each conduit diffuser will be identified with a label. This label will contain the section number, the direction of the air flow, the number of slots and the positioning of the eccentric rollers.

3. Performances

The manufacturer shall demonstrate for approval :

3.1 A diagram of the air flow, illustrating the trajectory of the air jets.

3.2 The pressure loss generated by the system and duct diffusers supplied by the manufacturer

The pressure loss generated by the entire network

4. Adjustment

4.1 The adjusting of the eccentric rollers will be done by the manufacturer according to the required output.

4.2 The adjustment of the eccentric rollers will be possible even after the installation of the diffuser in order to meet new output requirements.

5. Balancing

5.1 The balancing of the diffusers shall be done by a ventilation balancing technician, accredited as a qualified professionnal.

5.2 When required, the technician will refer to the eccentric roller adjustment mode available in the manufacturers' reference manual.

6. Required quality : NAD Klima model RRA

Training

DAL358

- Ceiling diffuser, square or round

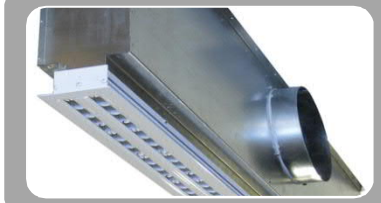

SAL35

- Linear diffuser

RRA

- Duct diffuser with slots

RDD

- Duct diffuser with perforation

RDD

- Perforated duct diffuser
- Perforation adapted to the configuration of the room
- Ideal for open ceiling applications
- Maximum installation height 60ft (18 m)
- Minimum installation height 13ft (4.0 m)

Adaptive perforations

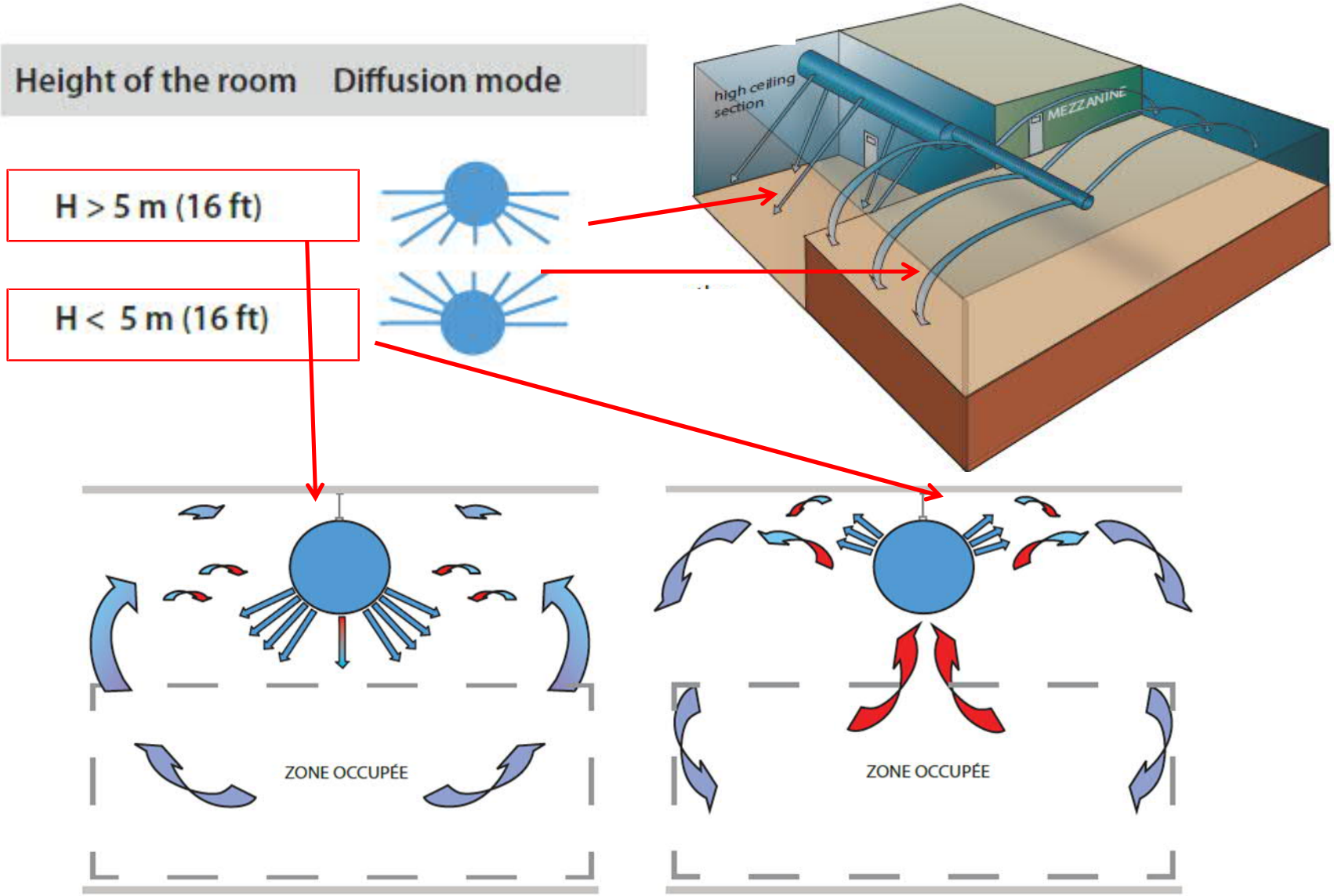

Large scale results

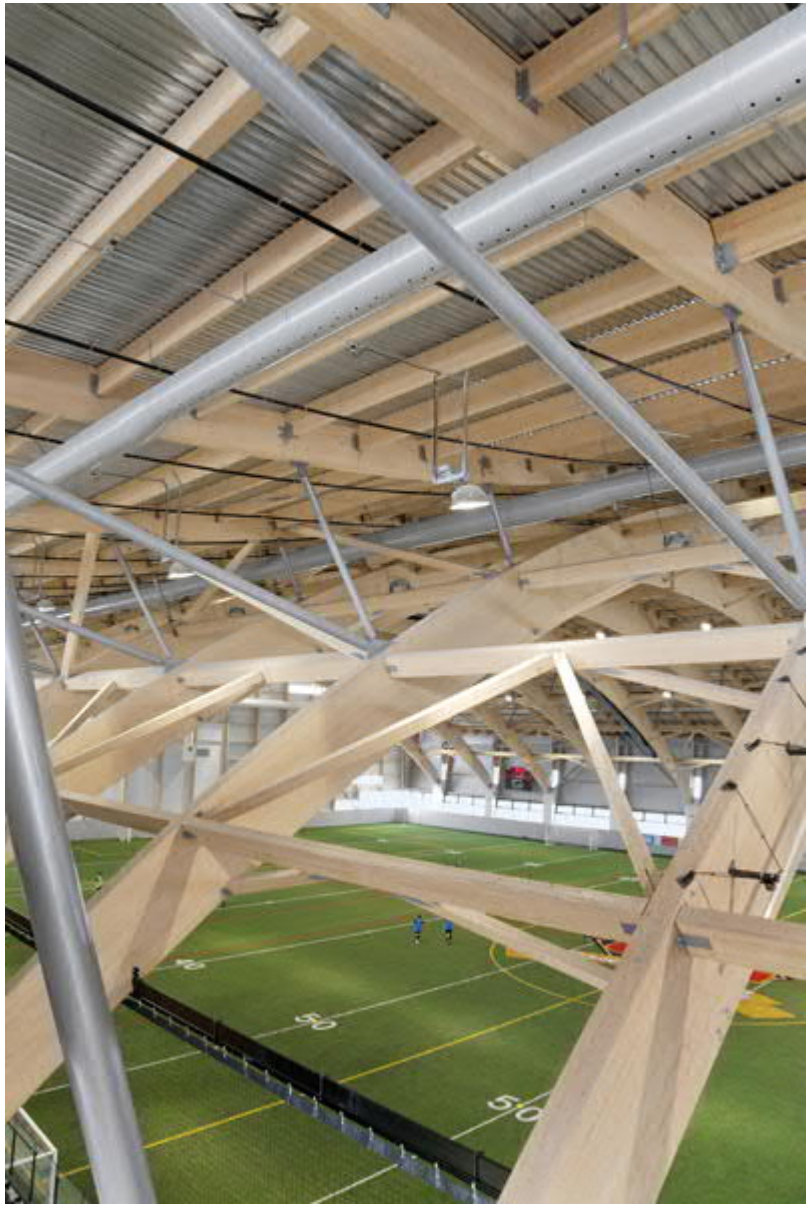

Selection steps

1. Determine location of ducts
2. Determine the Ø Diameter
3. Balance the air flow
4. Provide construction drawings

Sample of calculation

Zone 1 : 4160 m³/h (2450 cfm)
Zone 2 : 1232 m³/h (725 cfm)
Height of underside duct: 13ft (4 m)

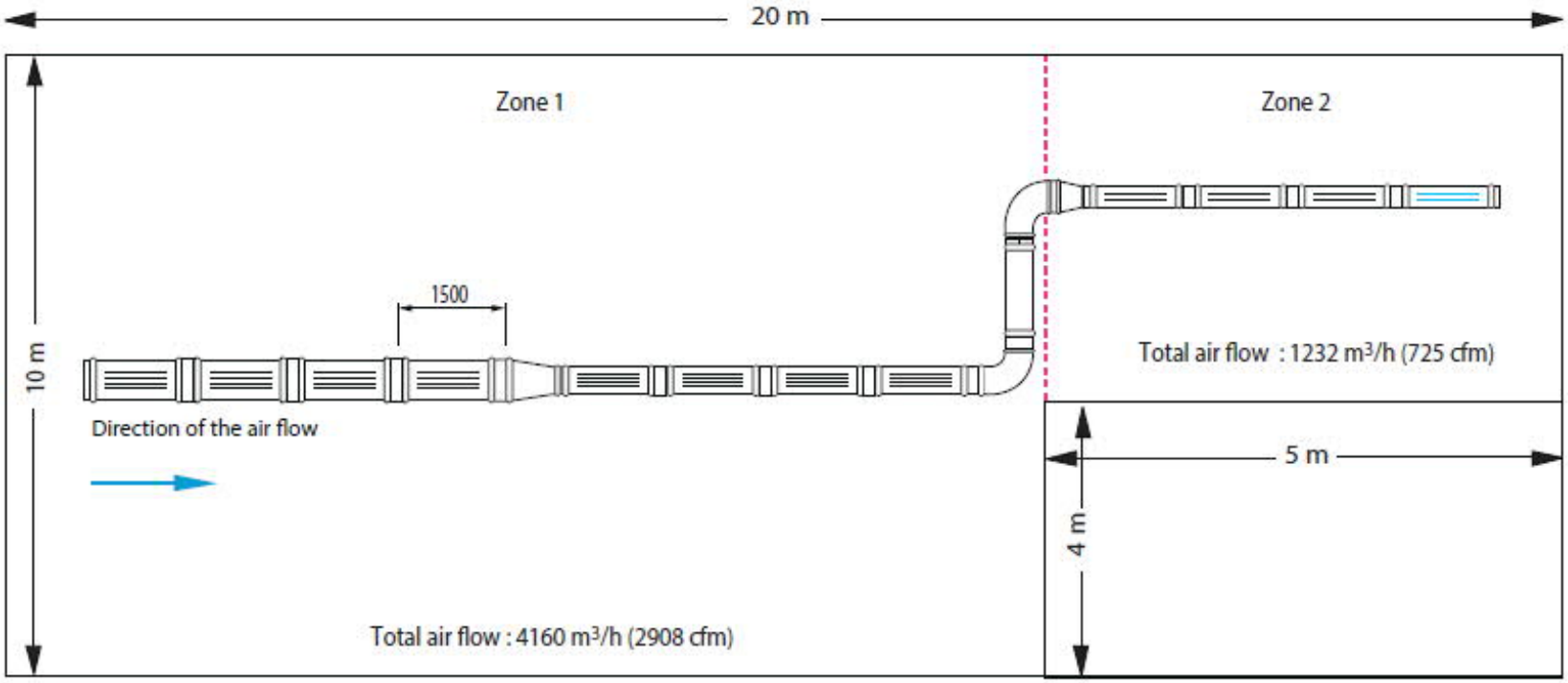

Example of layout

1. Determine placement of ducts
2. Determine the Ø
3. Balance air flow

Minimum installation space

Height of the installation of RDD H	Recommended spacing between RDD X MAXIMUM
m (ft)	m (ft)
≤ 6 (20)	6 (20)
6 - 10 (20-30)	10 (30)
10-15 (30 - 50)	12 (40)

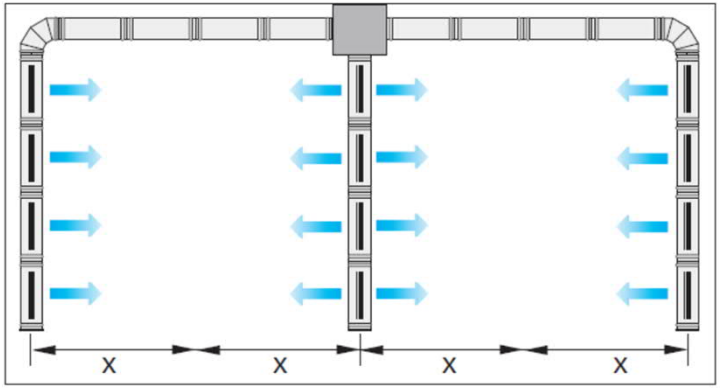

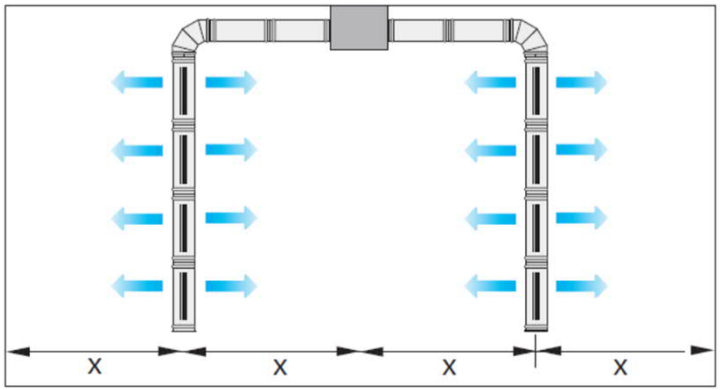

Recommendations for direct connection

1. Determine placement of ducts
2. Determine the Ø
3. Balance air flow

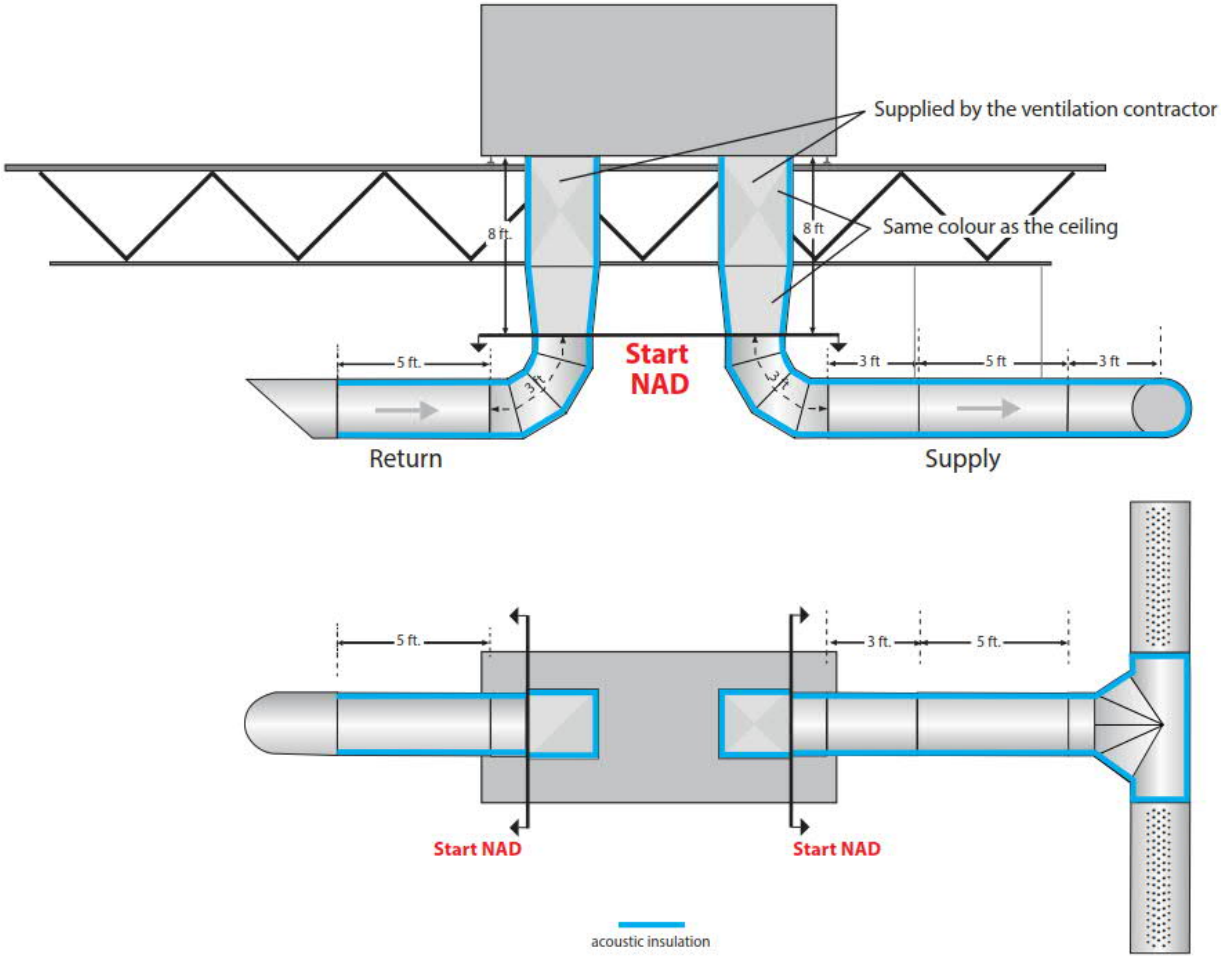

1. Determine placement of ducts
2. Determine the Ø
3. Balance air flow

Recommendation for the connection between NAD and spiral duct

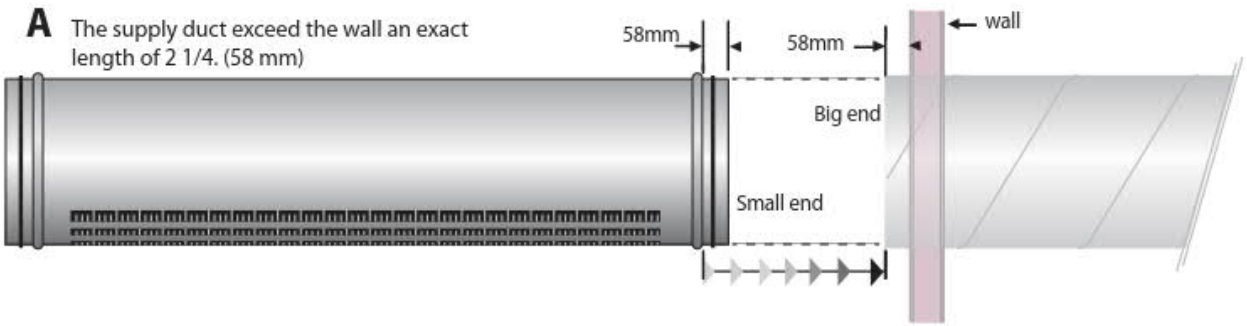

The supply duct exceed the wall an exact length of 2’’1/4 (58 mm)

1. Determine placement of ducts
2. Determine the Ø
3. Balance air flow

Optimal layout

Minimum installation space

Height of the installation of RDD H	Recommended spacing between RDD X MAXIMUM
m (ft)	m (ft)
≤ 6 (20)	6 (20)
6 - 10 (20-30)	10 (30)
10-15 (30 - 50)	12 (40)

The RDD covers the entire zone

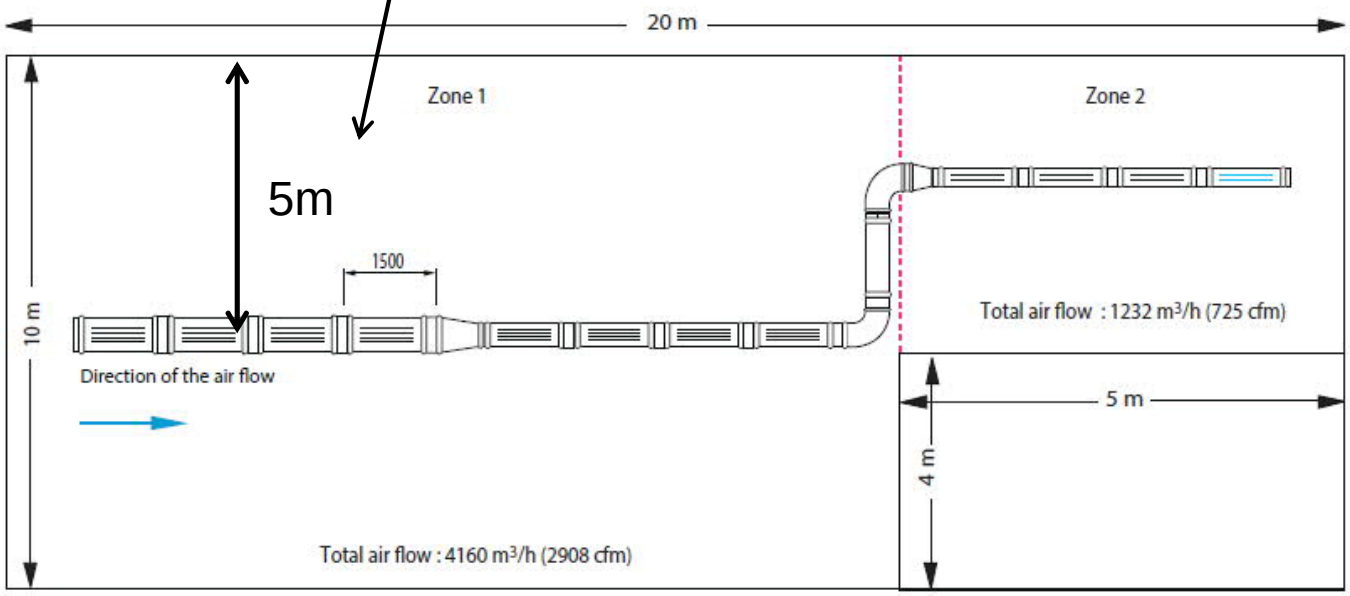

1. Determine placement of ducts
2. Determine the Ø
3. Balance air flow

Selection of diameter

- Select diameter of duct
- ***For airflow of less than 1400 cfm,*** *use the following chart*

Flow range	Ø recommended
below 280 cfm	200 mm (8 in.)
281cfm to 460 cfm	251 mm (10 in.)
461cfm to 650 cfm	303 mm (12 in.)
651 cfm to 1100 cfm	353 mm (14 in.)
1101 cfm to 1400 cfm	403 mm (16 in.)

- ***For airflow greater than 1400 cfm :***

  Select the diameter of the duct to obtain a maximum airspeed of 1000 cfm:

  Use the « ductulator » or the formula

$$V = {}^{Q}/_{A}$$

V : air speed (fpm)
Q : air flow range (cfm)
A : surface area of duct (ft^2)

1. Determine placement of ducts
2. Determine the Ø
3. Balance air flow

Diameter selection

Zone 1 : Composed of 2 sections
Section n° 1 :
- 4 x Ø 556 mm
Zone 2 : Composed of 1 section
- 4 x Ø 353 mm

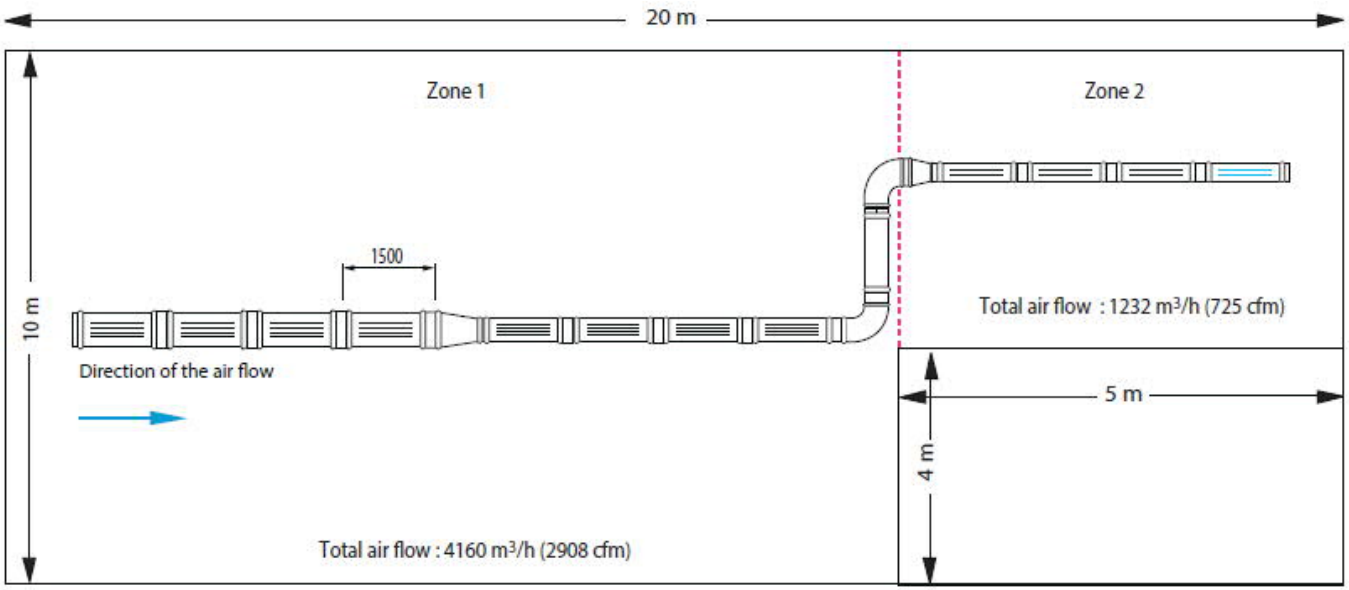

RDD Rules

1. Determine placement of ducts
2. Determine the Ø
3. Balance air flow

Install 1 Reducer or Damper every 50 ft or every 10 active sections

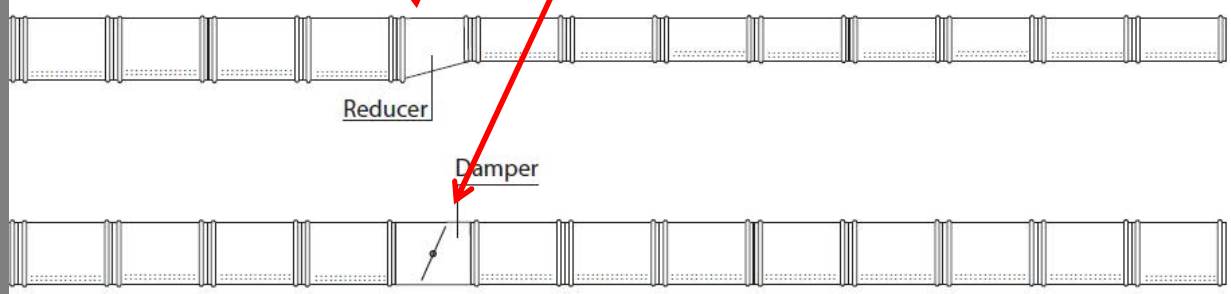

NAD Spec Chart

Tableau NAD_Specifications RDD

Identification	Brand	Model	Airflow	Ceiling height	Height below the duct	Room Temp in winter	Room R.H. % in winter	Temp. in duct in winter	Room Temp In summer	Room R.H. % In summer	Tempin duct in summer	Notes
RDD-A	NAD Klima	RDD										1, 2, 3,4,5,6,7
RDD-B	NAD Klima	RDD										1, 2, 3,4,5,6,7
RDD-C	NAD Klima	RDD										1, 2, 3,4,5,6, 7
RDD-D	NAD Klima	RDD										1, 2, 3,4,5, 6,7

Note :

1 – 3/8 threated rod will be supplied by contractor.

2 – The color of the diffuser must be selected from the RAL chart

3 – The diffusers perforations are made with a software to meet the performance needs

4- The aluminium suspension rails will be painted the RAL color chosen and supplied by the manufacturer.

5- The rod covers will be painted the RAL color chosen and supplied by the manufactuer.

6- The ducts will be acoustically insolated by the manufacturer.

7- Starter flange included

Codification of RDD on plans

TAG DIFFUSER

Air flow

RDD-A	85 l/s per section
Ø 400	1500

Ø of the duct

Length of the duct

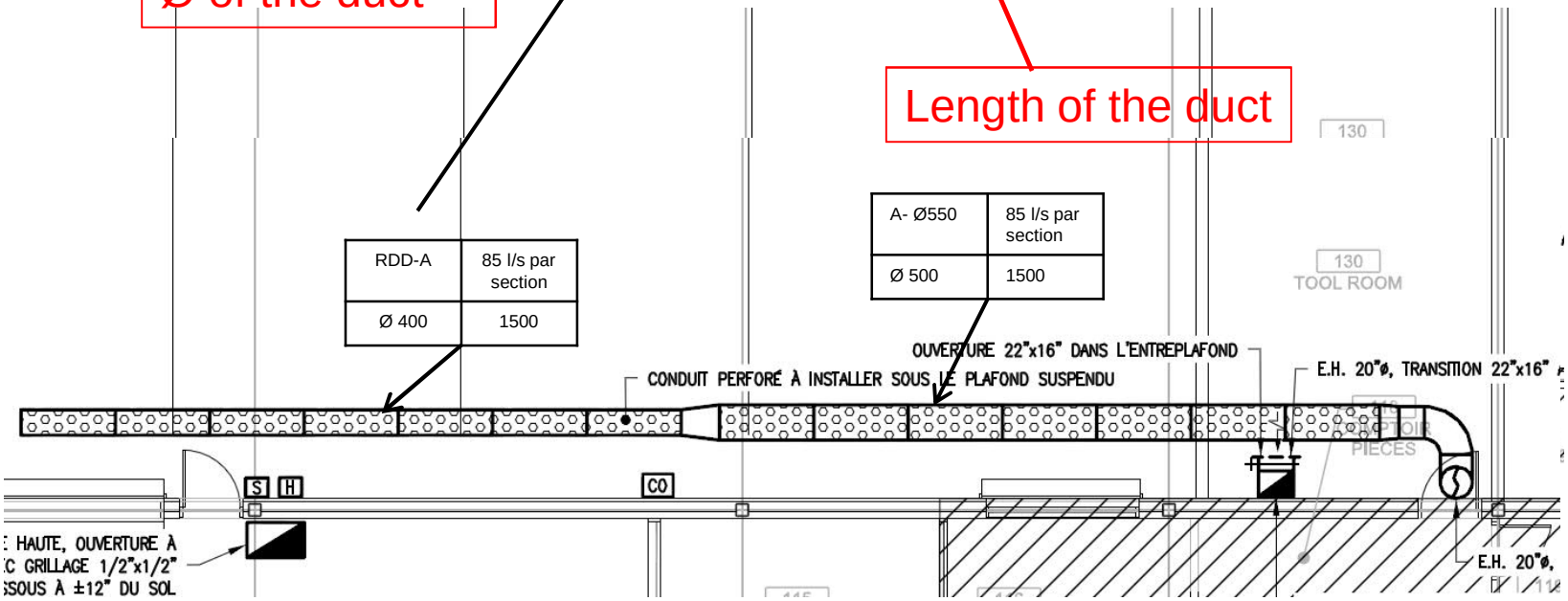

Codification

Codification of RDD duct diffusers

RDD		Product
	1000, 1500, 1800	Lenght L_B
	200, 251, 302, 353, 403, 454, 505, 556, 607, 657, 708, 759, 810, 861, 911, 962, 1013, 1064, 1115, 1165, 1216, 1267, 1318, 1369, 1419	Duct diameter
	A = Active (with perforation) X = Passive (without perforation)	Perforation
	9003 = White 9010 = Cream 00SB = Solar black (Standard matte black) 00SM = Silver mat (Standard metallic grey) ____ = RAL color (write the color number of RAL)	Diffuser Color
	A = With closed-cell insulation X = Without insulation	Insulation
	D = With damper X = Without damper	Balancing damper
RDD - 1500 - 200 - A - 9003 - X - X	Annotation	Example

Codification for reducers

RDD	RED = Reducer	Product
	254, 305, 356, 406, 457, 508, 559, 610, 660, 711, 762, 813, 864, 914, 965, 1016, 1067, 1118, 1168, 1219, 1270, 1321, 1372, 1422	Ø D - Input diameter
	203, 254, 305, 356, 406, 457, 508, 559, 610, 660, 711, 762, 813, 864, 914, 965, 1016, 1067, 1118, 1168, 1219, 1270, 1321, 1372	Ø d - Output diameter
	T = Flat on Top (standard) C = Centered B = Flat on Bottom	Configuration
	S = Standard α = 14° A = Other (specify in annotation)	Length
	9003 = White, 9010 = Cream 00SB = Solar black (Standard matte black) 00SM = Silver Mat (Standard metallic grey) ____ = RAL color (write the color number of RAL)	Color
	A = With closed-cell insulation X = Without insulation	Insulation
RDD - RED - 305 - 203 - T - S - 9003 - X	Annotation	Example

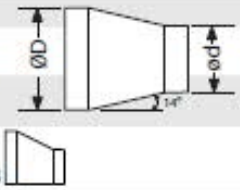

Notes:
Blue: Standard
Our thermo lacqued paint are available in the RAL chart colors. Metallic colors are available upon request only.

Specification

Available online
In word and excel format
www.nadklima.com

1. Description and physical characteristics

1.1 The high induction duct diffuser will be made of 22 ga brushed steel for duct inferior to 508 mm in diameter, and 20 ga for diameter superior or equal to 508mm.

1.2 The circular duct diffuser will be available in diameter ranging from 203 mm to 1419 mm. The duct diffuser will be equiped at each end with a groove with a gasket made of EPDM to insure a tight seal between sections. The sections will be assembled using union sleeves.

1.3 Steel reininforcements will be have to be installed inside ducts of more than 433 mm (17 inches) in diameter in order to maintain it's shape.

1.4 The duct diffuser will be painted with a TGIC free polyester powder coat. It will have a smooth surface for easy cleaning. The colour will be chosen by the architect or the customer. The paint of the diffuser must be guaranteed against peeling for a minimum period of 5 years.

1.5 The pattern for the holes will be determine with the help of a computer program.

1.6 The holes will be made with a laser cutter and burr free.

1.7 When required, the duct diffuser will be equiped with balancing perforated damper with a self blocking mechanism allowing for air output of between 10% to 100%.

1.8 The union sleeves will not exceed the dimensions of the duct by 3 mm, and will be rounded to facilitate cleaning. The duct will have as smooth as possible surface to maintain an architectural appearence.

1.9 The duct diffuser can be passive, without holes.

2. Installation and suspension

2.1 The suspension of the duct will be done with threaded rods (3/8") supplied by the installer.

2.2 The threaded rods can be covered with rod covers supplied by the manufacturer of the diffuser. The colour of the rod covers according to the RAL colour chart will be chosen by the architect or the customer.

2.3 When required, the suspension of the duct diffuser will be available in three options.

2.3.1 **Rail suspension**
The duct diffuser could be slid into an aluminium rail suspended, offering a solution for varied types of ceiling. The rail can be painted according to the RAL colour chart and chosen by architect or customer.

2.3.2 **Suspension by metallic cable**
The duct diffuser can be suspended by metallic cable (aviation style) 7 X 7 or 7 X 9 of galvanised or stainless steel (304 or 316) of medium or high traction resistance.

2.3.3 **Wall suspension**
The duct diffuser can be anchored laterally with an adjustable wall support in the same colour as the duct diffuser. This wall support will be supplied by the manufacturer of the diffuser.

2.4 When the duct diffuser goes through a wall, a collar adapted to the duct diffuser shall be supplied by the manufacturer.

2.5 The standard accessories shall have the same finish as the duct diffuser (elbows, sleeves, reducers, branches, etc.)

3. Performances
The manufacturer shall demonstrate for approval :

3.1 A diagram of the air flow, illustrating the trajectory of the air jets.

3.2 The pressure loss generated by the system and duct diffusers supplied by the manufacturer

The pressure loss generated by the entire network

4. Balancing

4.1 The balancing of the diffusers shall be done by a ventilation balancing technician, accredited as a qualified professionnal.

5. Required quality : NAD Klima model RDD.

Photos 2020 University